ABB MEASUREMENT & ANALYTICS | DATA SHEET

# Advance Optima AO2000

## Continuous gas analyzers

ENGINEERED
TO OUTRUN



# Measurement made easy

## Modular continuous gas analyzers

**A wide variety of measurement technology**

- Analyzer modules for all process and emission monitoring applications
- Up to four analyzer modules handling a total of six sample components
- Measurement of non-flammable and flammable gases in Zone 1 and Zone 2, as well as corrosive and toxic gases
- Performance-tested for emission monitoring in accordance with EN 15267

**Versatile, easy to use**

- Common controls, common connection technology
- Automatic calibration with air or integral calibration cells eliminating the need for test gas cylinders
- Modular design for ease of service
- Self-monitoring function indicates when maintenance is required

**Application-oriented design**

- Housing design for 19” rack mounting or wall mounting
- Optional gas extraction
- Ethernet, Modbus® and PROFIBUS® interfaces
- Configurable analog and digital inputs and outputs

**User-friendly operation**

- Simultaneous numeric display and bar graph of measured values on a large graphics panel
- Menu-driven operator interface
- Clear-text status messages

# Overview

## The modular product line

Advance Optima AO2000 Series is a modular product line used for continuous process gas analysis.

The product line consists of the following modules:

- Analyzer modules,
- Pneumatic module,
- Electronics module with system controller and I/O modules,
- Housing with display and control unit and
- System bus.

The modules can be arranged in various ways to form single or multiple analyzer systems.

The electronics module, power supply and housing with display and control unit are also collectively referred to as the 'central unit'.

## Measuring technology (analyzer modules)

The following analyzer modules are available for selection:

| Analyzer module | Measuring task | Measurement-related data |
|---|---|---|
| Infrared photometer **Uras26** | Measurement of for example $CO_2$, CO, NO, $SO_2$ | **Uras26 infrared photometer** from page 7 onwards |
| Ultraviolet photometer **Limas21 UV, Limas21 HW** | Measurement of for example NO, $NO_2$ and $SO_2$. | **Ultraviolet photometer Limas21 UV** from page 10 onwards |
| | | **Ultraviolet Photometer Limas21 HW** from page 14 onwards |
| Oxygen analyzer **Magnos28** | Measurement of $O_2$ in operating gas or in $N_2$ | **Oxygen analyzer Magnos28** from page 18 onwards |
| Oxygen analyzer **Magnos27** | Measurement of $O_2$ in flue gas or in $N_2$ | **Oxygen analyzer Magnos27** from page 21 onwards |
| Trace oxygen analyzer **ZO23** | Measurement of $O_2$ in pure gases | **Trace oxygen analyzer ZO23** from page 23 onwards |
| Thermal conductivity analyzer **Caldos25, Caldos27** | Measurement of binary mixtures such as Ar in $O_2$, $H_2$ in Ar, $CH_4$ in $N_2$ | **Thermal conductivity analyzer Caldos25** from page 26 onwards |
| | | **Thermal conductivity analyzer Caldos27** from page 29 onwards |
| Flame ionization detector **Fidas24, Fidas24 Ex, Fidas24 NMHC** | Measurement of hydrocarbons | **FID analyzer Fidas24** from page 32 onwards |
| | | **FID analyzer Fidas24 NMHC** from page 35 onwards |
| | | **Design AO2040 Ex-p for use in Zone 1, 21 and Zone 2, 22** from page 55 onwards |
| Laser analyzer in **LS25** | Measurement in the near infrared spectrum e.g. $O_2$, $NH_3$, $H_2O$, CO, HCL | **Laser analyzer LS25** from page 39 onwards |
| Electrochemical oxygen sensor | Measurement of $O_2$ | **Electrochemical oxygen sensor** from page 47 onwards |

Each analyzer module consists of the sensor and associated electronics having its own processor.

The analyzer modules are connected to the system controller through the system bus. The external laser analyzer module LS25 is connected to the central unit via Ethernet.

The analyzer modules are supplied with DC 24 V from an integral power supply or an external unit.

The electrochemical oxygen sensor is assigned to an analyzer module as part of the pneumatic module.

# … Overview

## Pneumatic Module

When fully equipped, the pneumatic module includes one or three solenoid valves for test gas supply, one or two disposable filters for fine filtration, a pump with coarse filter and capillary tube for gas feed, one or two flow sensors for flow monitoring and an electrochemical oxygen sensor.

The pneumatics module is always associated with an analyzer module and installed in the same housing as the analyzer module.

## Housing design

The system housing is designed as a 19" housing (model AO2020) or as a wall-mounted housing (model AO2040).

A version that can be purged is also available, see **Housing purge** on page 67.

The display and control unit is located on the front panel of the housing when the electronics module is installed.

### IP rating

The IP rating of the housing depends on the housing design and the analyzer modules installed.

| Version / analyzer module | IP20 | IP40 | IP54 | IP65 |
|---|---|---|---|---|
| Without connection box | X | | | |
| Version for emission measurement | | X | | |
| With connection box and Limas21 HW, Magnos27, Fidas24*, ZO32 | | | X* | |
| With connection box and Uras26, Limas21, Magnos28, Caldos25, Caldos27 | | | | X |
| Version that can be purged (option) | | | X | X |
| AO2040 Ex-p | | | | X |
| AO2040 Ex-p with Magnos27 or ZO23 | | | X | |

* IP rating IP54 not for the pressure equalization opening of the Fidas24, see **Gas and electric connections Fidas24 and Fidas24 NMHC** on page 86.

**Note**
For combinations of analyzer modules, the lower IP rating applies.
Example:
When combining Uras26 (IP65) with Magnos27 (IP54), the resulting IP rating is then **IP54**.

## Electronics module, interfaces

The electronics module incorporates the system controller with the I/O-modules.

The **system controller** carries out the following functions:

- Processing and communicating the measured values supplied by the analyzer module sensor electronics,
- Compensating measured values, e.g. cross sensitivity correction,
- Controlling system functions, e.g. calibration.
- Display and control functions,
- Controlling associated systems, e.g. gas supply,
- Communicating with external systems.

The system controller communicates with the other functional units of the gas analyzer, such as the analyzer modules, via the system bus.

Interfaces for controlling associated systems and for communicating with external systems are located on the system controller (Ethernet 10/100/1000BASE-T interface) and on the I/O modules.

The **I/O modules** are attached and directly connected to the system controller board. There are six types of I/O modules:

- PROFIBUS® module with one RS485 and one MBP interface,
- Modbus® module with one RS485 and one RS232 interface,
- Digital I/O module with four digital inputs and four digital outputs,
- 2-way analog output modules have two analog outputs,
- 4-way analog output modules have four analog outputs,
- 4-way analog input modules have four analog inputs.

Examples of I/O module applications include:

- Output of measured values as current signals,
- Output of status and alarm signals,
- Calibration control,
- Control of external solenoid valves and pumps,
- Measuring range switching and feedback,
- Feed of current or status signals from external analyzers,
- Feed of status signals from peripherals.

## System bus

The gas analyzer's functional units are interconnected via the system bus.

The system bus structure is linear with a maximum length of 350 meters.

Only one electronics module with up to five I/O modules should be connected to a system bus structure.

## Sample gas line conditioning

The SCC-F sample gas feed unit and the SCC-C sample gas cooler can be connected to the gas analyzer via the system bus by means of an I/O board installed in the sample gas feed unit.

Thus it is possible to display, monitor and control individual sample gas conditioning functions in the gas analyzer, such as cooler temperature or condensate and flow status.

For further information, please refer to the 'DS/SCC – System components and accessories for sample gas conditioning' data sheet.

## Notes on the metrological data of the analyzer modules

- The metrological data for the analyzer modules apply only when operated in conjunction with the central unit.
- The measurement-related data has been determined in accordance with IEC 61207-1:2010 'Expression of performance of gas analyzers – Part 1: General'. They are based on operation at atmospheric pressure (1013 hPa) and nitrogen as the associated gas. Compliance with these characteristics when measuring other gas mixtures can only be assured if their composition is known.
- The physical detection limit is the lower limit of the measurement-related data relative to the measuring range span.

# … Overview

## Configuration of analyzer units and multiple analyzer systems

This data sheet contains specifications for all modules in the Advance Optima AO2000 Series modular product line.

This data sheet was not intended to be used for configuring an analyzer unit or a multiple analyzer system. For a quotation please contact your ABB sales representative who can also provide advice and support during configuration.

**Example 1** shows the modules and components that normally make up an analyzer unit as well as the selection possibilities for configuring an analyzer unit.

The modular product line allows modules and components to be formed into an analyzer unit (see **Example 1**) or into multiple analyzer systems (**Example 2**).

**Example 1: Variant of an analyzer in a 19" housing (AO2020)**

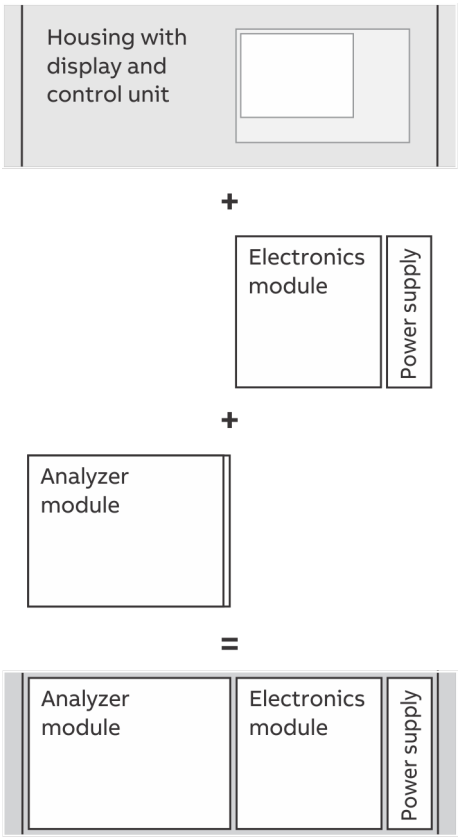


Housing with display and control unit (see page 66)
- Housing type
- with/without display and control unit
- Power supply (unless otherwise specified on electronics module)

Electronics module (see page **Fehler! Textmarke nicht definiert.**)
- Power supply
- I/O module equipment
- Interfaces
- Power supply (see page 68)

Analyzer module (see page 7 to page 47)
- Gas path design
- Gas connections
- Type of installation
- Analyzer-specific data

System configuration
- Number of housings
- Number of analyzer modules
- System bus wiring
- DC 24 V analyzer power supply

**Example 2: Variant of a multi-analyzer in a wall-mounted housing (AO2040)**

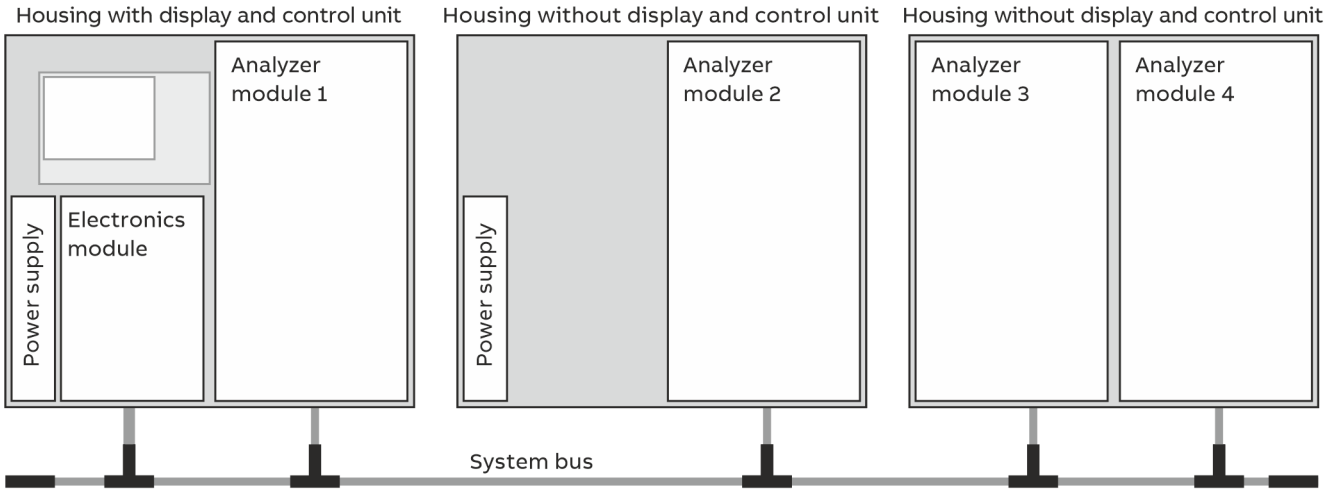

# Uras26 infrared photometer

## Measuring principle

Non-dispersive infrared absorption

Photometer with 1 or 2 beam paths (gas paths) to measure up to 4 sample components

## Sample components and measurement ranges

The Uras26 analyzer module has one physical measurement range per sample component. As an option, smaller measuring ranges can be electronically derived from the physical measurement range. The smallest range is measurement range 1.

The smallest measuring ranges specified in the following table refer to the 1st Measuring component of a optical path.

| Sample component | Smallest class 1 range | Smallest class 2 range | Smallest meas. range Class 2 with calibration cell | Gas group* |
|---|---|---|---|---|
| CO | 0 to 50 ppm | 0 to 10 ppm | 0 to 50 ppm** | A |
| $CO_2$ | 0 to 50 ppm | 0 to 5 ppm | 0 to 25 ppm** | A |
| NO | 0 to 75 ppm | 0 to 75 ppm | 0 to 75 ppm** | A |
| $SO_2$ | 0 to 100 ppm | 0 to 25 ppm | 0 to 25 ppm** | A |
| $N_2O$ | 0 to 50 ppm | 0 to 20 ppm | 0 to 50 ppm** | A |
| $CH_4$ | 0 to 100 ppm | 0 to 50 ppm | 0 to 50 ppm** | A |
| $NH_3$ | 0 to 500 ppm | 0 to 30 ppm | – | B |
| $C_2H_2$ | 0 to 200 ppm | 0 to 100 ppm | 0 to 100 ppm | B |
| $C_2H_4$ | 0 to 500 ppm | 0 to 300 ppm | 0 to 300 ppm | B |
| $C_2H_6$ | 0 to 100 ppm | 0 to 50 ppm | 0 to 50 ppm** | B |
| $C_3H_6$ | 0 to 250 ppm | 0 to 100 ppm | 0 to 100 ppm** | B |
| $C_3H_8$ | 0 to 100 ppm | 0 to 50 ppm | 0 to 50 ppm** | B |
| $C_4H_{10}$ | 0 to 100 ppm | 0 to 50 ppm | 0 to 50 ppm** | B |
| $C_6H_{14}$ | 0 to 500 ppm | 0 to 100 ppm | 0 to 100 ppm** | B |
| $SF_6$ | 0 to 5 ppm | 0 to 4 ppm | – | B |
| $H_2O$ | 0 to 1000 ppm | 0 to 500 ppm | 0 to 500 ppm | C |

* See price information

** The smallest measuring range 1 is shown. The largest measurement range should be at least four times larger.

**Note**
Other sample components on request.

**Number of measuring ranges**
1 to 4 measuring ranges per sample component

**Largest measuring range**
0 to 100 vol.-% or 0 vol.-% to saturation or 0 vol.-% to LEL
Measuring ranges within ignition limits cannot be provided.

**Measuring range ratio**
≤ 1:20

**Suppressed measuring ranges**
Electronic zero-point suppression or differential measurement based on a base level > 0 with flowing reference gas, max. suppression ratio of 1:10.

## Stability

The following data only applies if all the influence variables (e.g. flow, temperature and air pressure) are constant. They relate to the smallest measurement range.

**Linearity error**
≤ 1 % of span
Option: Linearization in accordance with EPA- specifications for automotive exhaust gas measurement

**Repeatability**
≤ 0.5 % of span

**Zero drift**
≤ 1 % of the measuring span per week;
for measuring ranges smaller than Class 1 up to Class 2:
≤ 3 % of span per week

**Span drift**
≤ 1 % of measured value per week

**Output signal fluctuation (2 σ)**
≤ 0.2 % of span at electronic $T_{90}$- time
= 5 s (class 1) or = 15 s (class 2)

**Detection limit (4 σ)**
≤ 0.4 % of the measuring span at electronic $T_{90}$ time
= 5 sec (Class 1) or = 15 sec (Class 2)

# … Uras26 infrared photometer

## Influences

**Flow effect**

Flow rate in the 20 to 100 l/h range:
Within the detection limit

**Associated gas effect/cross sensitivity**

Analyzer calibration should be based on an analysis of the sample gas.

Selectivation measures to reduce the associated gas effect (options):
Incorporation of interference filters or filter cells, internal electronic cross-sensitivity or carrier gas correction for one sample component by other sample components measured with the Uras26.

**Temperature effect**

Ambient temperature in permissible range

- At the zero point:
  ≤ 1 % of the span per 10 °C; for measuring ranges smaller than class 1 to class 2:
  ≤ 2 % of the span per 10 °C
- On the sensitivity with temperature compensation:
  ≤ 3 % of the measured value per 10 °C
- On the sensitivity with thermostat effect at 55 °C (optional): ≤ 1 % of the measured value per 10 °C

**Air pressure effect**

- At the zero point:
  no influence effect
- On sensitivity with pressure correction using an integrated pressure sensor:
  ≤ 0.2 % of the measured value per 1 % of air pressure change

**Power supply effect**

DC 24 V ± 5 %: ≤ 0.2 % of span

## Dynamic response

**Warm-up time**

approx. 30 minutes without thermostat; approx. 2 hours with thermostat.

**$T_{90}$ time**

$T_{90}$ = 2.5 sec for measurement cell length = 200 mm and sample gas flow = 60 l/h without signal damping (low pass filter). Low-pass time constant adjustable from 0 to 60 sec

## Calibration

| Calibration | Test gas |
|---|---|
| Zero-point calibration | With inert gas, e.g. nitrogen, or with ambient air that is free of the sample component. |
| End-point calibration | With test gas or with calibration cells filled with gas (option).<br>It is recommended to verify the calibration cell set values once a year. |

**Note**

When calibrating a multi-component analyzer, test gas mixtures can also be used if there are no cross-sensitivities between them. During calibration, possible electronic cross-sensitivity corrections are switched off, therefore, corrected measurement components should be calibrated only using a test gas consisting of the measurement component and an inert gas such as nitrogen.

## Materials

**Analyzer (sample cells)**

- Tube: Aluminum or gold-plated aluminum;
- Window: $CaF_2$, option: $BaF_2$;
- Connection socket: Stainless steel 1.4571 (AISI 316Ti)

**Gas lines and connectors**

- Gas lines: FPM hoses or PTFE pipes with stainless steel connections;
  Option: Pipes made of stainless steel 1.4571
- Gas connections: stainless steel 1.4571

## Gas connections

Refer to **Gas connections** on page 8

## Sample gas conditions

**Note**

For the AO2040 Ex-p device version, different sample gas conditions apply according to chapter **Special characteristics of the Uras26 in the AO2040 Ex-P** on page 59.

### Sample gas inlet conditions

| **Uras26 – sample gas input conditions** | |
|---|---|
| **Temperature** | |
| If the sample gas taken from the process is hotter than the coldest point in the sample gas path, there may be condensation at this point, if the gas contains components that can condense.<br>Therefore, the sample gas dew point should be at least 5 °C below the lowest temperature throughout the sample gas path. Otherwise a sample gas cooler or condensate trap is an absolute requirement. | |
| **Pressure** | |
| Internal pressure drop: | < 5 hPa at standard flow rate of 60 l/h |
| Permissible absolute pressure range: | 800 to 1250 hPa<br>Operation under lower absolute pressure (e.g. at altitudes above 2000 m) on request |
| Gauge pressure in the sample cell: | max. 500 hPa |
| **Flow rate** | 20 to 100 l/h |

Corrosive gases

Highly corrosive associated gas components, e.g. chlorine ($Cl_2$) and hydrogen chloride (e.g. HCl), as well as gases or aerosols containing chlorine must be cooled or undergo prior absorption. Provide for housing purge.

Flammable gases

- The analyzer module is suited for the measurement of flammable gases and vapors under atmospheric conditions ($p_{abs}$ ≤ 1.1 bar, oxygen content ≤ 21 vol.-%). Temperature class: T4.
- The sample gas may not be explosive in standard operation; If the sample gas is explosive in the event of a sample gas supply failure, then only seldom and briefly (in accordance with Zone 2).
- Pressure in the sample gas path in standard operation $p_e$ ≤ 100 hPa; in case of a sample gas supply failure the pressure must not up-scale the maximum value $p_e$ = 500 hPa.
- The version with gas paths designed as stainless steel tubes should be selected and housing purge with nitrogen should be provided when measuring flammable gases and vapors.
- Before using the analyzer module, the corrosion resistance against the specific sample gas must be checked.
- The pressure sensor must not be connected to the sample gas path.

**Requirements for the sample gas outlet**

The analyzer is operated under atmospheric pressure; the sample gas outlet is open to atmosphere.

# Ultraviolet photometer Limas21 UV

## Measuring principle

Gas filter correlation or wavelength comparison in ultraviolet and visible spectrum range λ = 200 to 600 nm

Photometer to measure from 1 to 4 components.

Sample cells made from various materials are available for measurement in corrosive, toxic and flammable gases (see **Sample cells for Limas21 UV, Limas21 HW** on page 13).

## Sample components and measurement ranges

The Limas21 UV analyzer module has one physical measurement range per sample component. As an option, smaller measuring ranges can be electronically derived from the physical measurement range. The smallest range is measurement range 1.

| Sample component | Smallest class 1 range | Smallest class 2 range | Gas group* |
|---|---|---|---|
| NO** | 0 to 50 ppm | 0 to 10 ppm | A |
| $SO_2$ | 0 to 150 ppm | 0 to 25 ppm | A |
| $NO_2$ | 0 to 250 ppm | 0 to 50 ppm | B |
| $NH_3$ | 0 to 100 ppm | 0 to 30 ppm | B |
| $H_2S$ | 0 to 50 ppm | 0 to 25 ppm | B |
| $Cl_2$ | 0 to 250 ppm | 0 to 100 ppm | D |
| $CS_2$ | 0 to 100 ppm | 0 to 50 ppm | C |
| COS | 0 to 500 ppm | 0 to 250 ppm | C |

* See price information

** The UV-RAS (ultra-violet resonant absorption spectroscopy) method is used to make the analyzer selective to the sample component NO.

Other sample components on request.

**Number of measuring ranges**

1 to 4 measuring ranges per sample component

**Largest measuring range**

0 to 100 vol.% or 0 vol.% to saturation or 0 vol.% to LEL
Measuring ranges within ignition limits cannot be provided.

**Measuring range ratio**

Measurement ranges freely adjustable within a range ratio of 1:20 relative to the factory-set reference measuring range

**Measuring ranges with suppressed zero point**

Electronic zero-point suppression, max. suppression ratio of 1:10

## Stability

The following data only applies if all the influence variables (e.g. flow, temperature and air pressure) are constant. They apply to measurement range 1 in a delivered analyzer module.

**Linearity error**

≤ 1 % of span; option: Linearization according to EPA specification for vehicle exhaust measurements

**Repeatability**

≤ 0.5 % of span

**Zero drift**

- ≤ 2 % of span per week.
- ≤ 1.5% of the measuring span per day (Recommendation: daily automatic zero point calibration)

**Span drift**

≤ 1 % of measured value per week

**Output signal fluctuation (2 σ)**

≤ 0.5 % of span with electronic $T_{90}$-time = 10 s;
for measuring ranges smaller than Class 1 to Class 2:
≤ 1 % of span

**Detection limit (4 σ)**

≤ 1 % of the measuring span; for ranges smaller than Class 1 to Class 2: ≤ 2 % of span

## Influences

**Flow effect**

Flow rate in the range 20 to 100 l/h:
Selectivity measures to reduce associated gas effect (optional):

**Associated gas effect/cross sensitivity**

Analyzer calibration should be based on an analysis of the sample gas.

At zero-point:
Installation of filter cells or internal electronic cross-sensitivity correction or carrier gas correction for a sample component by other sample components measured with the Limas21.

**Temperature effect**

no influence effect; ¬On sensitivity without pressure correction:

- At zero point:
  ≤ 1 % of the span per 10 °C;
  for measuring ranges smaller than Class 1 to Class 2:
  ≤ 2 % of the span per 10 °C
- On sensitivity:
  ≤ 1 % of the measured value per 10 °C

**Air pressure effect**

- At zero point:
  No effect
- On sensitivity with pressure correction using an integrated pressure sensor:
  ≤ 0.2 % of the measured value per 1 % air pressure change

**Power supply effect**

DC 24 V ± 5 %: ≤ 0.2 % of span

## Dynamic response

**Warm-up time**

Approx. 2.5 hour

**$T_{90}$ time**

$T_{90}$ = 4 s for measurement cell length = 262 mm and sample gas flow = 60 l/h without signal damping (low pass filter). Low-pass time constant adjustable from 0 to 60 sec

## Calibration

**Zero-point calibration**

With inert gas, e.g. nitrogen, or with ambient air that is free of the sample component.

**End-point calibration**

with gas-filled calibration cells (optional) or with test gas. It is recommended to verify the calibration cell set values once a year.

During calibration of a multi-component analyzer, possible cross-sensitivity and/or carrier gas corrections by internal or external measurement components are switched off. Therefore, corrected measurement components should be calibrated only using a test gas consisting of the measurement component and an inert gas such as nitrogen.

## Materials

Refer to **Sample cells for Limas21 UV, Limas21 HW** on page 13.
**Sample cells for Limas21 UV, Limas21 HW** on page 13

# … Ultraviolet photometer Limas21 UV

## Sample gas conditions

**Note**
For the AO2040 Ex-p device version, different sample gas conditions apply according to chapter **Special characteristics of the Limas21UV in the AO2040 Ex-P** on page 60.

### Sample gas inlet conditions

| **Limas21 UV – sample gas input conditions** | |
|---|---|
| **Temperature** | |
| If the sample gas taken from the process is hotter than the coldest point in the sample gas path, it can condensate there, if the gas contains components that can condense.<br>Therefore, the sample gas dew point should be at least 5 °C below the lowest temperature throughout the sample gas path. Otherwise a sample gas cooler or condensate trap is an absolute requirement. | |
| **Pressure** | |
| Internal pressure drop: | < 5 hPa at standard flow rate of 60 l/h |
| Permissible absolute pressure range: | 800 to 1250 hPa.<br>Operation under lower absolute pressure (e.g. at altitudes above 2000 m) on request |
| Gauge pressure in the sample cell: | max. 500 hPa |
| **Flow rate** | 20 to 100 l/h |

### Requirements for the sample gas outlet

The analyzer is operated under atmospheric pressure; the sample gas outlet is open to atmosphere.

### Corrosive, toxic and flammable gases

Refer to **Sample cells for Limas21 UV, Limas21 HW** on page 13.

## Gas connections

Refer to **Sample cells for Limas21 UV, Limas21 HW** on page 13.

## Sample cells for Limas21 UV, Limas21 HW

Depending on which sample cell has been installed in the analyzer module, the following application restrictions and notes must be observed:

| | **Standard cell** | **Quartz cell** |
|---|---|---|
| **Application** | Standard applications | Corrosive gases |
| **Wavelength range** | 200 to 600 nm | 200 to 600 nm |
| **Resistance**[1] | | |
| Suitable for measurement of … | Non-corrosive gases | corrosive gases, e.g. wet $Cl_2$, wet HCl, $H_2SO_4$, $SO_3$, ozone |
| Not suitable for measurement of … | Highly corrosive gases, e.g. gases containing chlorine, $H_2SO_4$, $SO_3$, fluorine compounds | Fluorine compounds |
| **Safety principle** | | |
| Toxic gases | Housing purge (≤ 20 l/h) with sample component-free air or with $N_2$ | Housing purge (≤ 20 l/h) with sample component-free air or with $N_2$ |
| Corrosive gases | PTFE gas lines, housing purge (≤ 20 l/h) with sample component-free air or with $N_2$ | Housing purge (≤ 20 l/h) with sample component-free air or with $N_2$ |
| Flammable gases[4] | Stainless steel gas lines, housing purge (≤ 20 l/h) with $N_2$ | — |
| **Leak tightness** | < $1 \times 10^{-3}$ hPa l/s | < $1 \times 10^{-6}$ hPa l/s |
| **Pressure rating** | | |
| Continuous | $p_e$ < 500 hPa | $p_e$ < 500 hPa |
| Spike | $P_{abs}$ < 300 kPa | $p_{abs}$ < 300 kPa |
| **Sample cell material** | | |
| Cell tube | Aluminum | Silica glass ($SiO_2$) |
| Window | $CaF_2$, adhesive fastening | Silica glass |
| Seal | — | FFKM75 |
| Connectors | Stainless steel 1.4571 | PFA |
| **Gas line materials** | FPM or PTFE | PFA |
| **Gas connector materials** | Stainless steel 1.4571 | PFA |
| **Sample gas connection design** | Connectors with ⅛ NPT female threads<br>For connection drawing, see **Limas21 UV gas connections** on page 78. | Pipes 6/4 mm |

1) See also **Sample gas inlet conditions** on page 12.
2) purge curtain
3) $p_e$ = 7 to 20 hPa, flow 15 to 20 l/h
4) The analyzer module is suited for the measurement of flammable gases and vapors under atmospheric conditions ($p_{abs}$ ≤ 1.1 bar, oxygen content ≤ 21 vol.%). Temperature class: T4. The sample gas must not be explosive at normal operation.
   Pressure in the sample gas path in standard operation $p_e$ ≤ 100 hPa; in case of a sample gas supply failure the pressure must not up-scale the maximum value $p_e$ = 500 hPa. Before using the analyzer module, the corrosion resistance against the specific sample gas must be checked.

# Ultraviolet Photometer Limas21 HW

## Measuring principle and application

Limas21 HW is a multi-component analyzer for simultaneous measurement of nitrogen compounds in wet sulfur-free flue gas without converter.

**Measurement principle**

Photometer to measure NO, $NO_2$ and $NH_3$.

Selectivation on the sample component NO using the UV-RAS (ultra-violet resonant absorption spectroscopy) method.

Wavelength comparison in ultraviolet spectrum range λ = 200 to 600 nm.

**Application**

Exhaust gas measurement for the development of combustion engines and methods for exhaust gas after-treatment, in particular for pure gas measurement after catalyst in:

- Four-stroke gasoline and diesel engines,
- Catalysts for nitrogen oxide reduction.

Process measurement e.g. for monitoring, controlling and optimizing DeNOx SCR processes.

## Sample components and measuring ranges (recommendations), stability data

**Exhaust gas measurement for four-stroke gasoline and diesel engines**

| Sample component | Smallest measurement range | Largest range |
|---|---|---|
| NO | 0 to 100 ppm | 0 to 5000 ppm |
| $NO_2$ | 0 to 100 ppm | 0 to 2500 ppm |

**Linearity error**

≤ 1 % of span.
≤ 2 % of measured value in accordance with EPA-specifications for automotive exhaust gas measurement

**Repeatability**

≤ 0.25 % of span

**Zero drift**

≤ 1 ppm or ≤ 1 % of span per 24 hours based on the smallest recommended measuring range (daily automatic zero point calibration recommended)

**Span drift**

≤ 1 % of measured value per week

**Output signal fluctuation (2 σ)**

≤ 400 ppb or ≤ 0.4 % of span at electronic $T_{90}$ time = 5 s

**Detection limit (4 σ)**

≤ 800 ppb or ≤ 0.8 % of span at electronic $T_{90}$ time = 5 s

**Diluted exhaust gas measurement for four-stroke gasoline and diesel engines, bag measurement**

| Sample component | Smallest measurement range | Largest range |
|---|---|---|
| NO | 0 to 10 ppm | 0 to 500 ppm |
| $NO_2$ | 0 to 10 ppm | 0 to 500 ppm |

**Linearity error**
≤ 1 % of span.
≤ 2 % of measured value in accordance with EPA-specifications for automotive exhaust gas measurement

**Repeatability**
≤ 0.25 % of span

**Zero drift**
≤ 250 ppb or ≤ 2 % of the span per 8 hours based on the smallest recommended measuring range (daily automatic zero point calibration recommended)

**Span drift**
≤ 1 % of measured value per week

**Output signal fluctuation (2 σ)**
NO: ≤ 50 ppb or ≤ 0.5 % of span,
$NO_2$: ≤ 60 ppb or ≤ 0.5 % of span at electronic $T_{90}$ time = 15 s

**Detection limit (4 σ)**
NO: ≤ 100 ppb or ≤ 1 % of span,
$NO_2$: ≤ 120 ppb or ≤ 1 % of span at electronic $T_{90}$ time = 15 s

**Process measurement**

| Sample component | Smallest measurement range | Largest range |
|---|---|---|
| NO | 0 to 100 ppm | 0 to 1000 ppm |
| $NO_2$ | 0 to 100 ppm | 0 to 500 ppm |
| $NH_3$ | 0 to 100 ppm | 0 to 500 ppm |

**Linearity error**
≤ 1 % of span

**Repeatability**
≤ 0.25 % of span

**Zero drift**
≤ 1 ppm or ≤ 1 % of span per 24 hours based on the smallest recommended measuring range (daily automatic zero point calibration recommended)

**Span drift**
≤ 1 % of measured value per week

**Output signal fluctuation (2 σ)**
≤ 150 ppb or ≤ 0.15 % of span at electronic $T_{90}$ time = 30 s

**Detection limit (4 σ)**
≤ 300 ppb or ≤ 0.3 % of span at electronic $T_{90}$ time = 30 s

**Measuring ranges**

**Quantity**
1 to 4 measuring ranges per sample component

**Measuring range ratio**
Max. 1:20; Measuring ranges freely adjustable within a range ratio of 1:20 relative to the factory-set reference measuring range;

Max. 1:50 for fixed measuring ranges in accordance with EPA-specifications for automotive exhaust gas measurement.

# … Ultraviolet Photometer Limas21 HW

## Influences

**Flow effect**

Flow rate in the 20 to 90 l/h range: within the detection limit

**Associated gas effect/cross sensitivity**

Analyzer calibration should be based on an analysis of the sample gas.

Selectivation measures to reduce associated gas effect: Internal electronic cross-sensitivity correction or carrier gas correction for a sample component by other sample components measured with the Limas21 HW.

**Temperature effect**

Ambient temperature in permissible range,
Sample cell thermostat control to +80 °C

- At zero point:
  ≤ 2 % of the span per 10 °C
- On sensitivity:
  ≤ 2 % of the measured value per 10 °C

**Air pressure effect**

- At zero point:
  No effect
- On sensitivity with pressure correction using an integrated pressure sensor:
  ≤ 0.2 % of the measured value per 1 % air pressure change

**Power supply effect**

DC 24 V ± 5 %: ≤ 0.2 % of span

## Dynamic response

**Warm-up time**

Approx. 4 hour

**$T_{90}$time**

$T_{90}$ ≤ 5 sec for measurement cell length = 260 mm and sample gas flow = 60 l/h with non-linear filter (static/dynamic) = 15/1 s
Low-pass time constant adjustable from 0 to 30 s

## Calibration

**Zero-point calibration**

With inert gas, e.g. nitrogen, or with ambient air that is free of the sample component.

**End-point calibration**

with gas-filled calibration cells (optional) or with test gas. It is recommended to verify the calibration cell set values once a year.

During calibration of a multi-component analyzer, possible cross-sensitivity and/or carrier gas corrections by internal or external measurement components are switched off. Therefore, corrected measurement components should be calibrated only using a test gas consisting of the measurement component and an inert gas such as nitrogen.

## Materials

**Sample cell**

Pipe and window: Quartz glass, screw connection: PVDF, connection piece: PTFE

**Gas lines**

PTFE, FPM

**Gas connections**

Stainless steel 1.4571 (AISI 303), 1.4305 (AISI 316Ti)

## Housing purge

**Purge gas**

Sample component-free air or nitrogen Purge gas flow rate ≤ 10 l/h

## Sample gas conditions

**Sample gas inlet conditions**

| **Limas21 HW – sample gas input conditions** | |
|---|---|
| **Sample gas composition** | |
| Sulfur-free exhaust gas of combustors, $SO_2$ concentration < 25 ppm, $H_2O$ < 20 vol.%, filtered with pore width ≤ 0.5 µm | |
| **Temperature** | |
| If the sample gas taken from the process is hotter than the coldest point in the sample gas path, it can condensate there, if the gas contains components that can condense. Therefore, the sample gas dew point should be at least 5 °C below the lowest temperature throughout the sample gas path. Otherwise a sample gas cooler or condensate trap is an absolute requirement. | |
| **Pressure** | |
| Internal pressure drop: | < 5 hPa at standard flow rate of 60 l/h |
| Permissible absolute pressure range: | 800 to 1250 hPa. Operation under lower absolute pressure (e.g. at altitudes above 2000 m) on request |
| Gauge pressure in the sample cell: | max. 500 hPa |
| **Flow rate** | 20 to 90 l/h |

**Requirements for the sample gas outlet**

The analyzer is operated under atmospheric pressure; the sample gas outlet is open to atmosphere.

## Gas connections

Refer to **Limas21 UV gas connections** on page 78.

## Notes

- The Limas21 HW analyzer module can only be mounted in the 19” housing.
- $SO_2$ influences the $NH_3$ measured value. If the sample gas mixture contains $SO_2$, the requirement of internal corrections must be scrutinized. When ordering the average water vapor concentration has to be specified. The influence is corrected internally.

## Sample conditioning system requirements

**Sample gas feed-in**

The various applications require the sample gas feed-in to the gas analyzer at temperatures of 150 to 190 °C.

It is imperative to eliminate condensation and resublimation since $NO_2$ and $NH_3$ are easy soluble in water and can lead to salification. It is also imperative to prevent condensation of potentially present low-boiling hydrocarbons.

**Sample gas inlet temperature**

150 to 190 °C

**Sample gas filter**

During the measurement of NO and $NO2_2$: Sintered metal
Durind the measurement of $NH_3$: Ceramic; pore size ≤ 0,5 µm

**Materials**

PTFE, PVDF or Silicosteel®

# Oxygen analyzer Magnos28

## Measuring principle

Paramagnetic oxygen analyzer

## Sample components and measurement ranges

| Sample component | Smallest measurement range | Largest range |
|---|---|---|
| Oxygen ($O_2$) | 0 to 0.5 vol.% | 0 to 100 vol.% |

**Number of measuring ranges**
There are four available measuring ranges. The measuring range limits can be freely configured on the device.

The measuring range limits are set to
0 to 10/15/25/100 vol.% $O_2$ or in accordance with the order.

**Note**
Measurement ranges should not be set within ignition limits.

**Measuring ranges with suppressed zero point**
Suppressed measuring ranges can be freely adjusted in the range from 0 to 100 vol.-%. Multiple measuring ranges must be overlapping.
The minimum measuring span is 0.5 vol.-%.

For suppressed measuring ranges, pressure correction using a pressure sensor is required. If the analyzer has been ordered with the suppressed measuring range, a pressure sensor will be installed at the factory.

## Stability

The following data only applies if all the influence variables (e.g. flow, temperature and air pressure) are constant. They relate to the smallest measurement range.

**Linearity error**
≤ 0.5 % of the measuring span or ≤ 0.005 vol.% $O_2$, the greater value applies

**Repeatability**
≤ 50 ppm $O_2$

**Zero drift**
≤ 0.05 vol.-% $O_2$ per week
The value may be elevated during first commissioning or after a longer service life.

**Span drift**
Drift per week: ≤ 0.2 % of the measured value or
≤ 0.01 vol. % $O_2$, the greater value applies

**Output signal fluctuation (2 σ)**
≤ 25 ppm $O_2$ at electronic $T_{90}$ time (static/dynamic) = 3/0 sec

**Detection limit (4 σ)**
≤ 50 ppm $O_2$ at electronic $T_{90}$ time (static/dynamic) = 3/0 sec

## Influences

**Flow effect**

- Sample gas $N_2$:
  ≤ 0.1 vol. % $O_2$ in the permissible flow range;
- Sample gas air:
  ≤ 0.1 vol. % $O_2$ at a flow rate change of 10 l/h

**Associated gas effect**

Information on the influence of associated gases can be found in IEC 61207-3:2002 'Gas analyzers – Expression of performance – Part 3: Paramagnetic oxygen analyzers'.

**Temperature effect**

Average temperature effect in permissible ambient temperature range:

- At zero point:
  ≤ 0.02 vol. % $O_2$ per 10 °C
- On sensitivity:
  ≤ 0.3 % of the measured value per 10 °C
- For suppressed measuring ranges (if configured at the factory):
  ≤ 0.01 vol. % per 10 °C in the entire measuring range

Thermostat temperature: 60 °C

For suppressed and very small measuring ranges (≤ 0 to 1 vol. % $O_2$), greater temperature fluctuations (≥ 5 °C) at the installation site should be avoided.

**Air pressure effect**

- On sensitivity without pressure correction:
  ≤ 1 % of the measured value per 1 % air pressure change
- On sensitivity with pressure correction using an integrated pressure sensor (option):
  ≤ 0.1 % of the measured value per 1 % air pressure change
  For suppressed measuring ranges:
  ≤ 0.01 % of the measured value per 1 % air pressure change
  or ≤ 0.002 vol.-% $O_2$ per 1 % air pressure change, the greater value applies

**Power supply effect**

DC 24 V ± 5 %:
Selectivity measures to reduce associated gas effect (optional):

**Position effect**

Zero-point shift ≤ 0.05 vol. % $O_2$ per 1° deviation from horizontal location.
Position has no effect on the hard-mounted unit.

## Dynamic response

**Warm-up time**

The analyzer typically reaches the specified zero point drift per week after 2 h.
For measuring spans of < 0 to 5 % as well as on initial commissioning or after a longer service life, the value may be higher.

**$T_{90}$time**

$T_{90}$ ≤ 3 sec at a sample gas flow of 90 l/h and electronic $T_{90}$ time (static/dynamic) = 3/0 sec, gas change from nitrogen to air (applies to a gas analyzer only with Magnos28)

## Calibration

| Calibration | Test gas |
|---|---|
| Zero-point calibration | Oxygen-free operating gas or with substitute gas |
| End-point calibration | Operating gas with a known oxygen concentration or a substitute gas such as dried air. |
| Single-point calibration (For measuring ranges higher 0 to 5 vol. % $O_2$) | Zero point gas or operating gas with known oxygen concentration |
| Measurement ranges with suppressed zero-point | Suppressed measuring ranges should be calibrated for the greatest possible accuracy with high-accuracy purity gases or test gases. For calibration recommendation see the following table. |

**Test gases for suppressed measuring ranges**

| Upper range value | Zero gas point | End point gas |
|---|---|---|
| Up to 100 vol. % $O_2$ | $N_2$ | 100 % $O_2$ |
| Up to about 21 vol. % $O_2$ | $N_2$ | Instrument air or high-purity test gas |

## Materials

**Analyzer**

- Sample chamber: • Stainless steel 1.4305, nickel alloy, glass, PtNi, silicon, gold, PTFE
- Gaskets: FPM, option: FFKM75

# … Oxygen analyzer Magnos28

## Sample gas conditions

**Note**
For the AO2040 Ex-p device version, different sample gas conditions apply according to chapter **Special characteristics of the Magnos28 in the AO2040 Ex-P** on page 61.

### Sample gas inlet conditions

| **Magnos28 – sample gas input conditions** | |
|---|---|
| **Temperature**<br>• If the sample gas taken from the process is hotter than the coldest point in the sample gas path, there may be condensation at this point, if the gas contains components that can condense. Therefore, the sample gas dew point should be at least 5 °C below the lowest temperature throughout the sample gas path. Otherwise a sample gas cooler or condensate trap is an absolute requirement.<br>• When there is a direct connection to the sample chamber, the maximum sample gas dew point is 55 °C.<br>• Water vapor content variations cause volume errors. | |
| **Designation of gas connections** | |
| Internal pressure drop: | < 5 hPa at standard flow rate of 60 l/h. |
| Permissible absolute pressure range: | 800 to 1600 hPa.<br>Operation under lower absolute pressure (e.g. at altitudes above 2000 m) on request. |
| Operation in non-hazardous areas (GP) | • Non-flammable sample gases: max. 1.6 bar<br>• Flammable sample gases: max. 1,2 bar |
| Operation in potentially explosive areas (zone 2) | • Non-flammable sample gases: max. 1.6 bar<br>• Flammable sample gases: max. 1,1 bar |
| Operation under higher pressure. | A pressure sensor is required to compensate for pressure influences. |
| Absolute pressure ≤ 1250 hPa: | An optional internal pressure sensor can be connected to the sample gas path. |
| Absolute pressure ≥ 1250 hPa: | An external pressure sensor must be connected to the sample gas path. See **Note - Pressure compensation with external pressure sensor** on page 20 |
| The analyzer module is function-tested for 5000 hPa internal pressure without damage. | |
| **Flow rate** | 30 to 90 l/h;<br>measuring ranges ≤ 0 to 3 vol % $O_2$: 60l/h<br>For highly suppressed measuring ranges and measuring ranges of ≤ 0 to 3 vol % $O_2$, changes of the sample gas flow should be avoided. |

**Corrosive gases**

- Consultation with ABB Analytical is required if the sample gas contains $Cl_2$, HCl, HF or other corrosive components.
- If the sample gas contains $NH_3$, FFKM75 gaskets must be used; in this case, the pneumatic module cannot be connected to the analyzer module.
- The pressure sensor must not be connected to the sample gas path during measurement of corrosive gases.

**Flammable gases**

- The analyzer module is suited for the measurement of flammable gases and vapors under atmospheric conditions ($p_{abs}$ ≤ 1.1 bar, oxygen content ≤ 21 vol.-%). Temperature class: T4.
- The sample gas may not be explosive in standard operation; If the sample gas is explosive in the event of a sample gas supply failure, then only seldom and briefly (in accordance with Zone 2).
- Before using the analyzer module, the corrosion resistance against the specific sample gas must be checked.
- The pressure sensor must not be connected to the sample gas path.
- Housing purge with nitrogen should be provided during measurement of flammable gases and vapors.

**Requirements for the sample gas outlet**
The analyzer is operated under atmospheric pressure; the sample gas outlet is open to atmosphere.

**Pressure sensor**
**Note - Pressure compensation with external pressure sensor**
If the integration of an external pressure signal into the signal processing is required, this must be specified when ordering.
External pressure compensation is calculated using a function block.

## Gas connections

Refer to **Gas connections** on page 20.

# Oxygen analyzer Magnos27

## Measuring principle

Paramagnetic behavior of oxygen
Heavy-duty thermomagnetic analyzer

## Sample components and measurement ranges

**Sample component**

Oxygen ($O_2$) in flue gas or in nitrogen ($N_2$)

**Smallest measuring range**

0 to 3 vol.% $O_2$

**Measuring range quantity and measuring range limits**

1 to 4 measuring ranges
Ranges are factory-set in accordance with order.

**Largest measuring range**

0 to 100 vol.% $O_2$
Measuring ranges within ignition limits cannot be provided.

## Stability

The following data only applies if all the influence variables (e.g. flow, temperature and air pressure) are constant. They relate to the smallest measurement range.

**Linearity error**

≤ 2 % of span

**Repeatability**

≤ 1 % of measuring span

**Zero point drift**

≤ 1 % of span per week

**Span drift**

≤ 2 % of measured value per week

**Output signal fluctuation (2 σ)**

≤ 0.5 % of smallest measuring range span at electronic $T_{90}$ time = 0 s

**Detection limit (4 σ)**

≤ 1 % of the measuring span of the smallest measuring range at electronic $T_{90}$ time = 0 s

## Influences

**Flow effect**

≤ 1 % of span at a flow change of ±10 l/h. At an identical flow rate for test and sample gases, the flow rate effect is automatically compensated.

**Associated gas effect**

Magnos27 calibration applies only to the sample gas shown on the identification plate (= sample component + associated gas).

**Temperature effect**

Ambient temperature in permissible range

- At zero point:
  ≤ 2 % of span per 10 °C
- On the sensitivity:
  ≤ 0.5 % of the measured value per 10 °C

based on temperature at the time of calibration
Thermostat temperature = 63 °C.

**Air pressure effect**

- at zero point:
  < 0.05 vol. % $O_2$ per 1 % air pressure
- On sensitivity without pressure correction:
  ≤ 1.5 % of the measured value per 1 % of air pressure change
- On sensitivity with pressure correction using an integrated pressure sensor (option):
  ≤ 0.25 % of the measured value per 1 % of air pressure change

Option: calibration for operating altitude over 2000 m

**Power supply effect**

DC 24 V ± 5 %: ≤ 0.2 % of span

**Position effect**

Approx. 3 % of the span of the smallest measuring range per 1° deviation from horizontal orientation.
Position has no effect on the hard-mounted unit.

## Dynamic response

**Warm-up time**

2 to 4 h

**$T_{90}$ time**

$T_{90}$= 10 to 22 s, depending on sample gas flow and on the sample chamber connection (see **Gas connections** on page 22; applies to a gas analyzer only with Magnos27)

# … Oxygen analyzer Magnos27

## Calibration

**Zero-point calibration**

With oxygen-free process gas or substitute gas

**End-point calibration**

With process gas having a known oxygen concentration or with substitute gas

## Materials

**Analyzer**

Stainless steel 1.4580 and 1.4305, glass

**Gas lines and connectors**

Stainless steel 1.4571 and 1.4305, PVC-C, FPM

## Sample gas conditions

**Note**

For the AO2040 Ex-p device version, different sample gas conditions apply according to chapter **Special characteristics of the Magnos27 in the AO2040 Ex-P** on page 61.

### Sample gas inlet conditions

| **Magnos27 – sample gas input conditions** | |
|---|---|
| **Temperature**<br>• If the sample gas taken from the process is hotter than the coldest point in the sample gas path, there may be condensation at this point, if the gas contains components that can condense. Therefore, the sample gas dew point should be at least 5 °C below the lowest temperature throughout the sample gas path. Otherwise a sample gas cooler or condensate trap is an absolute requirement.<br>• When there is a direct connection to the sample chamber, the maximum sample gas dew point is 55 °C.<br>• Water vapor content variations cause volume errors. | |
| **Designation of gas connections** | |
| Internal pressure drop: | < 5 hPa at standard flow rate of 60 l/h. |
| Permissible absolute pressure range: | 800 to 1250 hPa.<br>Operation under lower absolute pressure (e.g. at altitudes above 2000 m) on request. |
| Gauge pressure in the measuring chamber: | max. 100 hPa. |
| **Flow rate** | 20 to 90 l/h |

**Flammable gases**

Measurement of flammable gases is not permitted.

**Requirements for the sample gas outlet**

The analyzer is operated under atmospheric pressure; the sample gas outlet is open to atmosphere.

## Gas connections

Refer to **Gas connections** on page 22.

# Trace oxygen analyzer ZO23

## Measuring principle

Potentiometric measurement

Zirconium dioxide cell for determination of the oxygen concentration in accordance with Nernst's equation; reference gas: ambient air.

The analyzer module is used for the continuous measurement of oxygen in pure gases ($N_2$, $CO_2$, Ar). The measuring cell is catalytically inactivated to the extent that flammable carrier components in stoichiometric concentrations only negligibly reduce the oxygen value.

## Sample components and measurement ranges

**Sample component**

Oxygen ($O_2$)

**Measuring ranges and measuring range limits**

4 measurement ranges
The limits of the measuring ranges are freely adjustable within the range of 0 to 1 ppm to 0 to 250,000 ppm $O_2$; they are factory-set to 0 to 1/10/100/1000 ppm $O_2$.
The following measurement data refer to a span of 100 ppm $O_2$ with a regulated flow rate of 8 ±0.2 l/h.

## Stability

The following data only applies if all the influence variables (e.g. flow, temperature and air pressure) are constant. They relate to the smallest measurement range.

**Linearity**

Owing to the measurement principle, zirconium dioxide cells are base linear.

**Repeatability**

< 1 % of the measuring span or 100 ppb $O_2$ (greater value applies)

**Zero point drift**

< 1 % of the measuring range per week or 250 ppb $O_2$ (greater value applies)

The zero point (reference point) is displayed if ambient air is present on the sample gas side.
The value for air of 20.6 vol. % $O_2$ (at 25 °C and 50 % relative air humidity) may deviate through aging of the cell.

**Span drift**

For pure gas measurements in $N_2$, $CO_2$ and Ar:
< 1 % of the measuring range per week or 250 ppb $O_2$ (greater value applies)

Depends on possible interfering components (catalyst poisons) in the sample gas and the aging of the cell.

**Output signal fluctuation (2 σ)**

< ±0.5 % of the measured value or 50 ppb $O_2$ (whichever is greater)

**Detection limit (4 σ)**

< ±1 % of the measured value or 100 ppb $O_2$ (whichever is greater)

# … Trace oxygen analyzer ZO23

## Influences

**Flow effect**

≤ 300 ppbv $O_2$ in the range from 5 to 10 l/h

**Associated gas effect**

Inert gases (Ar, $CO_2$, $N_2$) have no effect.
Flammable gases (CO, $H_2$, $CH_4$) in stoichiometric concentrations to the oxygen content:
Conversion $O_2$ < 20 % of the stoichiometric turnover.
If higher concentrations of flammable gases are present, higher $O_2$ conversions must be expected. The sum of concentrations of flammable gases in the sample gas must not exceed 100 ppm.

**Temperature effect**

The effect of the ambient temperature in the permissible range of 5 to 45 °C is < 2 % of the measured value or 50 ppb $O_2$ per 10 °C change in the ambient temperature, whichever value is greater

**Air pressure effect**

No effect through a change in air pressure; sample gas must flow out of the outlet without back pressure.

**Power supply effect**

DC 24 V ± 5 %: no effect

**Position effect**

No position effect for permanently installed instruments

## Dynamic response

**Warm-up time**

- The operating temperature of the cell is reached after approx. 15 minutes. Offset calibration with reference gas (ambient air) after 2 hours flow.
- The measurement is ready-to-run after valves and lines have been purged with sample gas. Typical purging time for valves and lines: approx. 2 to 5 hours.

**$T_{90}$ time**

$T_{90}$ < 60 sec for the alternation of 2 test gases in the measuring range 10 ppm with a sample gas flow rate = 8 l/h and electronic $T_{90}$ time = 3 sec

## Calibration

**Offset calibration**

The reference value for ambient air is calibrated at 20.6 vol.% $O_2$ by means of ambient air on the sample gas side.

**End-point calibration**

By means of test gas $O_2$ in $N_2$ (or in $CO_2$ or Ar);
$O_2$ concentration in the measuring range, e.g. 10 ppm $O_2$

## Function test

Extended response time or reduced sensitivity are dimensions for the correct functioning of the measuring cell. The function test can be carried out without any additional test gases by feeding the sample gas with constant concentration.

Based on the progression of the test, it can be assessed whether the reaction time of the sensor lies within a specified tolerance. The function test is started manually and lasts approx. 15 minutes.

Additional function block configuration is required for the cyclic scan.

## Materials

**Analyzer**

- Zirconium dioxide cell: $ZrO_2$, electrodes containing platinum
- Dust filter (optional): PP
- Flow sensor (optional): on semiconductor basis, nickel-plated brass

**Gas lines and connectors**

- Gas inlet (piped): Stainless steel 1.4571 (AISI 316Ti)
- Gas outlet: Silicone hose and FPM-hose
- Gas connections: Stainless steel 1.4401/1.4305

## Sample gas conditions

**Note**
For the AO2040 Ex-p device version, different sample gas conditions apply according to chapter **Special characteristics of the ZO23 in the AO2040 Ex-P** on page 63.

### Sample gas inlet conditions

**Note**
The analyzer module must not be used for measurement of ignitable gas/air or gas/oxygen mixtures.

| ZO23 – sample gas input conditions | |
|---|---|
| **Temperature** | 5 to 50 °C |
| **Inlet pressure** | $p_e \leq 70$ hPa |
| **Flow rate** | 4 to 20 l/h |

- The sample gas flow rate must be kept constant within the specified range at ±0.2 l/h.
- The sample gas must be taken unpressurized from a bypass.
- If the sample gas flow is too low, contamination effects from the gas lines (leaks, permeability, de-sorption) will lead to inaccuracies in the measurement result.
- If the sample gas flow is too high, asymmetrical cooling of the sensor may cause measurement errors. This can also cause quicker aging or damage to the measuring cell.

**Note**
The temperature, pressure and flow of the sample gas must be kept constant, to such an extent that the influence of variations on the measuring accuracy is acceptable, refer to **Influences** on page 24.

#### Corrosive gases

The presence of corrosive gases and catalyst poisons, such as halogens, gases containing sulfur and heavy-metal dust, leads to quicker aging and / or the destruction of the $ZrO_2$ cell.

#### Flammable gases

The analyzer module is suitable for measuring flammable gases in a non-explosive environment. The concentration of flammable gases in the sample gas must not exceed 100 ppm.

### Requirements for the sample gas outlet

The analyzer is operated under atmospheric pressure; the sample gas outlet is open to atmosphere.

### Purge gas

If case purging is selected, purging may only be carried out with air (not with nitrogen), since the ambient air is used as a reference gas.

**Note**
The ZO23 cannot be connected to or combined with the pneumatic module.

## Gas connections

Refer to **Gas connections** on page 25.

# Thermal conductivity analyzer Caldos25

## Measuring principle

Difference in thermal conductivity of various gases

Highly corrosion-resistant heat conductivity analyzer, measuring cell embedded in glass.

## Sample components and measurement ranges

The Caldos25 is specifically designed for measurements of corrosive gas components.

**Sample components and smallest measurement ranges (examples)**

| Sample component and associated gas | Smallest measurement range | Reference gas |
|---|---|---|
| $H_2$ in $N_2$ or air | 0 to 0.5 Vol.-% | Air (sealed) |
| $SO_2$ in $N_2$ or air | 0 to 1.5 Vol.-% | Air (sealed) |
| $H_2$ in $Cl_2$ | 0 to 0.5 Vol.-% | Flowing |

**Measuring range quantity and measuring range limits**

1 to 4 measuring ranges per sample component
The measuring ranges are factory-set in accordance with the customer order.

**Largest measuring range**

0 to 100 vol. % or 0 vol. % to saturation
Measurement ranges within ignition limits cannot be provided.

**Measuring range switching ratio**

≤ 1:20

**Measuring ranges with suppressed zero point**

Span at least 2 vol.%, depending on application

## Stability

The following data only applies if all the influence variables (e.g. flow, temperature and air pressure) are constant. They relate to the smallest measurement range.

**Linearity error**

≤ 2 % of span

**Repeatability**

≤ 1 % of span

**Zero drift**

≤ 1 % of span per week

**Span drift**

≤ 1 % of measured value per week

**Output signal fluctuation (2 σ)**

≤ 0.5 % of smallest measurement range span at electronic $T_{90}$ time = 3 sec

**Detection limit (4 σ)**

≤ 1 % of smallest measurement range span at electronic $T_{90}$ time = 3 sec

## Influences

**Flow effect**

≤ 1 to 5 % of span at a flow change of ±10 l/h.
At an identical flow rate for test and sample gases, the flow rate effect is automatically compensated.

**Associated gas effect**

Analyzer calibration should be based on an analysis of the sample gas.

Measurement results can be greatly distorted by interfering components in complex (non-binary) gas mixtures.

**Temperature effect**

Ambient temperature in permissible range

- In any point of the measuring range:
  ≤ 1 % of span per 10 °C, based on the temperature at the time of calibration

Thermostat temperature = 60 °C (140 °F)

**Air pressure effect**

No effect in permissible operating condition range

**Power supply effect**

DC 24 V ± 5 %: ≤ 0.2 % of span

**Position effect**

< 1 % of span up to 10° deviation from horizontal orientation

## Dynamic response

**Warm-up time**

1.5 hours

**$T_{90}$time**

$T_{90}$ typical = 10 to 20 s; optional: $T_{90}$ < 6 s
(applies to an analyzer unit with 1 analyzer module)

## Calibration

| Calibration | Test gas |
|---|---|
| Zero-point calibration | Sample-component-free process gas or substitute gas<br>With suppressed measuring range:<br>Substitute gas or operating gas with sample gas concentration close to the starting point of the measuring range |
| End-point calibration | Test gas, process gas with a known sample gas concentration or substitute gas |

## Materials

**Analyzer**

Stainless steel 1.4305 (AISI 303), glass

**Gas lines and connectors**

- If the reference gas is sealed:
  Stainless steel 1.4305;
- If the reference gas is flowing:
  PVC-C, FPM gaskets;
- For corrosive measurement gas:
  PVC-C, FPM gaskets;

Contains the $NH_3$ sample gas, therefore FFKM gaskets are used.

# … Thermal conductivity analyzer Caldos25

## Sample gas conditions

**Note**
For the AO2040 Ex-p device version, different sample gas conditions apply according to chapter **Special characteristics of the Caldos25 in the AO2040 Ex-P** on page 62.

### Sample gas inlet conditions

| **Caldos25 – sample gas input conditions** | |
|---|---|
| **Temperature**<br>• If the sample gas taken from the process is hotter than the coldest point in the sample gas path, there may be condensation at this point, if the gas contains components that can condense. The sample gas dew point should be at least 5 °C below the temperature throughout the sample gas path. Otherwise a sample gas cooler or condensate trap is required.<br>• Water vapor content variations cause volume errors. | |
| **Designation of gas connections** | |
| Internal pressure drop: | < 5 hPa at standard flow rate of 60 l/h. |
| Permissible absolute pressure range: | 800 to 1250 hPa.<br>Operation under lower absolute pressure (e.g. at altitudes above 2000 m) on request. |
| Gauge pressure in the measuring chamber: | max. 100 hPa. |
| **Flow rate** | Standard 10 to 90 l/h,<br>Max. 90 to 200 l/h for option $T_{90}$ < 6 s |

**Flowing reference gas**
Gas inlet conditions same as sample gas

**Flammable gases**
- The analyzer module is suited for the measurement of flammable gases and vapors under atmospheric conditions ($p_{abs}$ ≤ 1.1 bar, oxygen content ≤ 21 vol.%). Temperature class: T4.
- The sample gas may not be explosive in standard operation; If the sample gas is explosive in the event of a sample gas supply failure, then only seldom and briefly (in accordance with Zone 2).
- Pressure in the sample gas path in standard operation $p_e$ ≤ 100 hPa; in case of a sample gas supply failure the pressure must not up-scale the maximum value $p_e$ = 500 hPa.
- Before using the analyzer module, the corrosion resistance against the specific sample gas must be checked.
- Housing purge with nitrogen should be provided during measurement of flammable gases and vapors.

**Requirements for the sample gas outlet**
The analyzer is operated under atmospheric pressure; the sample gas outlet is open to atmosphere.

## Gas connections

Refer to **Gas connections** on page 28.

# Thermal conductivity analyzer Caldos27

## Measuring principle

Difference in thermal conductivity of various gases

Micromechanical silicon sensor with especially short $T_{90}$ time

## Sample components and measurement ranges

| Sample component and associated gas | Smallest measuring range | Smallest measurement range with suppressed zero-point |
|---|---|---|
| Ar in $CO_2$ | — | 50 to 100 Vol.-% |
| Ar in $H_2$ | 0 to 3 Vol.-% | 99 to 100 Vol.-% |
| Ar in He | 0 to 3 Vol.-% | 99 to 100 Vol.-% |
| Ar in air | 0 to 6 Vol.-% | 94 to 100 Vol.-% |
| Ar in $N_2$ | 0 to 6 Vol.-% | 97.5 to 100 Vol.-% |
| Ar in $O_2$ | 0 to 2 Vol.-% | 90 to 100 Vol.-% |
| $CH_4$ in $H_2$ | 0 to 3 Vol.-% | 99 to 100 Vol.-% |
| $CH_4$ in $N_2$ | 0 to 2 Vol.-% | 99 to 100 Vol.-% |
| CO in $H_2$ | 0 to 3 Vol.-% | 99 to 100 Vol.-% |
| $CO_2$in Ar | 0 to 50 Vol.-% | — |
| $CO_2$ in $H_2$ | 0 to 3 Vol.-% | 99 to 100 Vol.-% |
| $CO_2$ in air | 0 to 3 Vol.-% | 90 to 100 Vol.-% |
| $CO_2$ in $N_2$ | 0 to 3 Vol.-% | 90 to 100 Vol.-% |
| $H_2$ in Ar | 0 to 0.25 Vol.-% | 97 to 100 Vol.-% |
| $H_2$ in $CH_4$ | 0 to 1 Vol.-% | 97 to 100 Vol.-% |
| $H_2$ in CO | 0 to 1 Vol.-% | 97 to 100 Vol.-% |
| $H_2$ in $CO_2$ | 0 to 1 Vol.-% | 97 to 100 Vol.-% |
| $H_2$ in stack gas | 0 to 0.5 Vol.-% | — |
| $H_2$ in air | 0 to 0.3 Vol.-% | — |
| $H_2$ in $N_2$ | 0 to 0.3 Vol.-% | 97 to 100 Vol.-%<br>99 to 100 Vol.-%* |
| $H_2$ in $NH_3$ | 0 to 10 Vol.-% | 90 to 100 Vol.-% |
| $H_2$ in $O_2$ | 0 to 1 Vol.-% | 98 to 100 Vol.-% |
| He in Ar | 0 to 1 Vol.-% | 97 to 100 Vol.-% |
| He in air | 0 to 2 Vol.-% | 97 to 100 Vol.-% |
| He in $N_2$ | 0 to 2 Vol.-% | 97 to 100 Vol.-% |
| Air in Ar | 0 to 6 Vol.-% | 94 to 100 Vol.-% |
| Air in $CO_2$ | 0 to 10 Vol.-% | 90 to 100 Vol.-% |
| Air in $H_2$ | 0 to 3 Vol.-% | — |
| Ar in He | 0 to 3 Vol.-% | 98 to 100 Vol.-% |
| $N_2$ in Ar | 0 to 6 Vol.-% | 94 to 100 Vol.-% |
| $N_2$ in $CH_4$ | 0 to 6 Vol.-% | 94 to 100 Vol.-% |
| $N_2$ in $CO_2$ | 0 to 10 Vol.-% | 90 to 100 Vol.-% |
| $N_2$ in $H_2$ | 0 to 3 Vol.-% | 99 to 100 Vol.-% |
| $N_2$ in He | 0 to 3 Vol.-% | 98 to 100 Vol.-% |
| $NH_3$ in $H_2$ | 0 to 10 Vol.-% | 90 to 100 Vol.-% |
| $O_2$ in Ar | 0 to 10 Vol.-% | 90 to 100 Vol.-% |

* Daily zero point check required

**Sample components and measurement ranges for monitoring hydrogen-cooled turbo generators**

| Sample component and associated gas | Meas. range |
|---|---|
| $CO_2$ in air | 0 to 100 Vol.-% |
| $H_2$ in $CO_2$ | 100 to 0 Vol.-% |
| $H_2$ in air | 100 to 80/90 vol.% |

Other sample components on request.

**Measuring range quantity and measuring range limits**

1 to 4 measuring ranges per sample component
Range limits are freely adjustable. They are factory-calibrated for the largest possible measurement range.

**Largest measuring range**

0 to 100 vol. % or 0 vol. % to saturation, depending on measurement task.
Measurement ranges within ignition limits cannot be provided.

**Measuring range switching ratio**

≤ 1:20

**Measuring ranges with suppressed zero point**

See the table above for spans

# … Thermal conductivity analyzer Caldos27

## Stability

These data apply only to measuring ranges ≥ class 2

**Linearity error**
≤ 2 % of span

**Repeatability**
≤ 1 % of span

**Zero drift**
≤ 2 % of smallest possible measuring range per week

**Span drift**
≤ 0.5 % of the smallest provided measuring range per week

**Output signal fluctuation (2 σ)**
≤ 0.5 % of smallest measurement range span at electronic $T_{90}$ time = 3 sec

**Detection limit (4 σ)**
≤ 1 % of smallest measurement range span at electronic $T_{90}$ time = 3 sec

## Influences

**Flow effect**
≤ 0.5 % of span at a flow change of ±10 l/h. At an identical flow rate for test and sample gases, the flow rate effect is automatically compensated.

**Associated gas effect**
Analyzer calibration should be based on an analysis of the sample gas.

**Temperature effect**
Ambient temperature in permissible range.
At each point in the measuring range:
≤ 0.5 % of the measuring span per 10 °C, with respect to the temperature during calibration
Thermostat temperature = 60 °C (140 °F)

**Air pressure effect**
≤ 0.25 % of span per 10 hPa for the smallest ranges; for larger spans, the influence effect is correspondingly lower.
Power Supply Influence Calibration for operating altitude over 2000 m

**Power supply effect**
24 V DC ± 5 %: ≤ 0.2 % of span

**Position effect**
< 1 % of span up to 30° deviation from horizontal orientation

## Dynamic response

**Warm-up time**
Approx. 30/60 minutes for class 1/2 measuring ranges

**$T_{90}$time**
$T_{90}$ ≤ 2 s for direct sample chamber connection and sample gas flow = 60 l/h (applies to an analyzer unit with 1 analyzer module)

## Calibration

| Calibration | Test gas |
|---|---|
| Zero-point calibration | Sample-component-free process gas or substitute gas<br>With suppressed measuring range:<br>Substitute gas or operating gas with sample gas concentration close to the starting point of the measuring range |
| End-point calibration | Test gas, process gas with a known sample gas concentration or substitute gas |
| Single-point calibration with standard gas | Test gas with a known and constant rTC value or substitute gas (standard gas; possibly also dried room air) |

## Materials

**Analyzer**
- Sample chamber: Stainless steel 1.4305 (AISI 316Ti)
- Sensor: Gold, silicon oxi-nitride
- Gasket: FFKM75 (Perfluoro rubber)

## Sample gas conditions

**Note**
For the AO2040 Ex-p device version, different sample gas conditions apply according to chapter **Special characteristics of the Caldos27 in the AO2040 Ex-P** on page 62.

### Sample gas inlet conditions

**Note**
The analyzer module must not be used for measurement of ignitable gas/air or gas/oxygen mixtures.

| **Caldos27 – sample gas input conditions** | |
|---|---|
| **Temperature** | |
| • If the sample gas taken from the process is hotter than the coldest point in the sample gas path, there may be condensation at this point, if the gas contains components that can condense. Therefore, the sample gas dew point should be at least 5 °C below the lowest temperature throughout the sample gas path. Otherwise a sample gas cooler or condensate trap is an absolute requirement.<br>• Water vapor content variations cause volume errors | |
| **Designation of gas connections** | |
| Internal pressure drop: | < 5 hPa at standard flow rate of 60 l/h. |
| Permissible absolute pressure range: | 800 to 1250 hPa<br>Operation under lower absolute pressure (e.g. at altitudes above 2000 m) on request |
| Gauge pressure in the measuring chamber: | max. 100 hPa |
| **Flow rate** | Typically 10 to 90 l/h,<br>minimum 1 l/h |

Corrosive gases

- Consultation with ABB Analytical is required if the sample gas contains $Cl_2$, HCl, HF, $SO_2$, $NH_3$, $H_2S$ or other corrosive components.
- If the sample gas contains $NH_3$, flexible FPM tubes may not be used; flexible FFKM tubes must be used instead.
  In this case, the pneumatics module cannot be connected to the analyzer module.

Flammable gases

- The analyzer module is suited for the measurement of flammable gases and vapors under atmospheric conditions ($p_{abs}$ ≤ 1.1 bar, oxygen content ≤ 21 vol.%). Temperature class: T4.
- The sample gas may not be explosive in standard operation; If the sample gas is explosive in the event of a sample gas supply failure, then only seldom and briefly (in accordance with Zone 2).
- Pressure in the sample gas path in standard operation $p_e$ ≤ 100 hPa; in case of a sample gas supply failure the pressure must not up-scale the maximum value $p_e$ = 500 hPa.
- Before using the analyzer module, the corrosion resistance against the specific sample gas must be checked.
- The pressure sensor must not be connected to the sample gas path.
- Housing purge with nitrogen should be provided during measurement of flammable gases and vapors.

**Requirements for the sample gas outlet**
The analyzer is operated under atmospheric pressure; the sample gas outlet is open to atmosphere.

## Gas connections

Refer to **Gas connections** on page 31.

# FID analyzer Fidas24

## Measuring principle

Flame-ionization detector

The analyzer module complies with the requirements for measuring instruments with flame ionization detection according to EN 12619.

## Sample components and measurement ranges

**Sample components**

Hydrocarbons.
The concentration of the gas components in the sample gas path must not exceed the temperature-dependent LEL. The analyzer temperature is 180 °C.

**Number of sample components**

4 sample components

**Smallest measuring range**

0 to 5 to 0 to 1500 mg org. C/$m^3$ or
0 to 10 to 0 to 3000 ppm C1

**Largest measuring range**

0 to 80 g org. C/$m^3$ or 0 to 15 vol. % C1
Other measuring ranges on request.

**Measuring range quantity and measuring range limits**

1 to 4 measuring ranges
The measuring ranges are factory-set per customer order.
Smallest to largest measuring range ratio 1:300 to 1:1500 , depending on the configuration.

## Stability

The following data only applies if all the influence variables (e.g. flow, temperature and air pressure) are constant. They relate to the smallest measurement range.

They apply to measuring ranges ≥ 50 mg org. C/$m^3$; for smaller measuring ranges these only apply if they are factory-set in accordance with the order.

**Linearity error**

≤ 2 % of span to 5000 mg org. C/$m^3$,
this value applies in one (calibrated) measuring range

**Repeatability**

≤ 0.5 % of measurement range

**Zero drift**

≤ 0.5 mg org. C/$m^3$ per week

**Span drift**

≤ 0.5 mg org. C/$m^3$ per week

**Output fluctuation at zero point (2 σ)**

≤ 0.5 % of span at electronic $T_{90}$-time = 20 s

**Detection limit (4 σ)**

≤ 1 % of span at electronic $T_{90}$ time = 20 s

## Influences

**Oxygen dependence**

≤ 2 % of measured value for 0 to 21 vol. % $O_2$ or
≤ 0.3 mg org. C/$m^3$, the larger value applies in each case

**Temperature effect**

- Ambient temperature in permitted range
  - Standard: 5 to 45 °C
  - Measuring ranges < 100 ppm: 5 to 40 °C
- At the zero point and on the sensitivity:
  ≤ 2 % of the measured value per 10°C or ≤ 300 ppb C1 per 10°C

**Power supply effect**

- DC 24 V ± 5 %: ≤ 0.2 % of the span or
- AC 230 V ± 10 %: ≤ 0.2 % of the span or
- AC 115 V ± 10 %: ≤ 0.2 % of span

## Dynamic response

**Warm-up time**

≤ 2 h at nominal voltage and 25 °C ambient temperature

**$T_{90}$time**

$T_{90}$ < 1.5 s at sample gas flow = 80 l/h and electronic $T_{90}$time = 1 sec

## Calibration

| Calibration | Test gas |
|---|---|
| Zero-point calibration | With synthetic air or catalytically purified air or nitrogen, depending on the application. |
| End-point calibration | With propane or another hydrocarbon (substitute gas) in air or nitrogen, depending on the application. |

## Materials

**Analyzer, gas lines and connectors**

Stainless steel 1.4305 and 1.4571, FPM, PTFE, FFKM

## Sample gas conditions

**Note**

For the AO2040 Ex-p device version, different sample gas conditions apply according to chapter **Special characteristics of the Fidas24 in the AO2040 Ex-P** on page 63.

**Sample gas inlet conditions**

| Fidas24 – sample gas input conditions | |
|---|---|
| **Temperature** | ≤ Thermostat temperature (thermostat temperature for sample gas path, detector and air injector ≤ 200 °C, factory-set at180 °C) |
| **Inlet pressure** | $p_{abs}$ = 800 to 1100 hPa |
| **Flow rate** | approx. 80 to 100 l/h at atmospheric pressure (1000 hPa) |
| **Humidity** | ≤ 40 % $H_2O$ |

**Further properties of the sample gas**

The sample gas must not be explosive at any time.

The analyzer module must not be used for the measurement of gases containing organometallic compounds, e.g. lead-containing fuel additives or silicone oils.

**Flammable gases**

The gas analyzer may be used for the measurement of flammable gases provided that the flammable portion does not up-scale 15 Vol.-% $CH_4$ or does not up-scale C1 equivalents.

**Requirements for the sample gas outlet**

The analyzer is operated under atmospheric pressure; the sample gas outlet is open to atmosphere.

# … FID analyzer Fidas24

## Operational gases

### Instrument air

| Parameter | Value/Description |
|---|---|
| Quality | According to ISO 8573-1 Class 2<br>Particle size: max. 1 µm,<br>Particle density: max. 1 mg/m$^3$,<br>Oil content: max. 0.1 mg/m$^3$,<br>Dew point: At least 10 °C below the lowest expected ambient temperature |
| Inlet pressure $p_e$ | 4000 hPa, ±500 hPa |
| Flow rate | Typically approx. 1800 l/h (1200 l/h for the air jet injector and approx. 600 l/h for the housing purge),<br>max. approx. 2200 l/h (1500 l/h + 700 l/h) |

### Combustion air

| Parameter | Value/Description |
|---|---|
| Quality | • Synthetic air or catalytically purified air<br>• Organic hydrocarbon content: < 1 % of the measuring range |
| Inlet pressure $p_e$ | 1200 hPa, ±100 hPa |
| Flow rate | < 20 l/h |

### Combustion gas

**Note**

An $H_2$/He mixture may only be used if the gas analyzer has been ordered and delivered in the intended version.

| Combustion gas parameter | | |
|---|---|---|
| Quality | Hydrogen ($H_2$), Quality 5.0 | $H_2$/He mix (40 %/60 %) Quality 5.0 |
| Inlet pressure $p_e$ | 1200 hPa, ±100 hPa | 1200 hPa, ±100 hPa |
| Maximum combustion gas flow | approx. 3 l/h | approx. 10 l/h |

**Note**

A flow limiter must be provided on the hydrogen supply, see **Safe operation of the gas analyzer** on page 35.

### Test gases

| Test Gases for Zero Calibration | |
|---|---|
| Quality | Nitrogen, Quality 5.0, synthetic air or catalytically cleaned air with an organic C < 1 % MBU |
| Inlet pressure $p_e$ | 1000 ±100 hPa |
| Flow rate | 130 to 250 l/h |

| Test gases for endpoint calibration | |
|---|---|
| Quality | Test gas in nitrogen or synthetic air with concentration adjusted to the measuring range |
| Inlet pressure $p_e$ | 1000 ±100 hPa |
| Flow rate | 130 to 250 l/h |

### Zero point offset

If the zero point gas is not completely free of hydrocarbons (even purified nitrogen contains fractions of hydrocarbons), negative measured values may be displayed in small measuring ranges.
In this case, the sample gas contains a lower proportion of hydrocarbons than the zero point gas.

## Gas and Electrical Connections

Refer to **Gas and electric connections Fidas24 and Fidas24 NMHC** on page 86.

## Safe operation of the gas analyzer

The device concept ensures that a concentration of combustible gas or an explosive mixture of combustible gas and ambient air cannot occur in the interior of the gas analyzer during normal operation.

The interior of the gas analyzer cannot be allocated to an (explosion protection) zone; an explosive gas mixture cannot escape to the outside.

The end user must make the following provisions to ensure safe operation of the gas analyzer:

- The combustion gas flow rate must be limited to a maximum of 10 l/h $H_2$ or 25 l/h $H_2$/He mixture. For this purpose, the end user has to provide suitable measures outside the gas analyzer.
- A shut-off valve must be installed in the combustion gas supply line to increase safety in the following operating conditions: shutting down the gas analyzer, failure of the instrument air supply, leakage in the combustion gas feed path inside the gas analyzer. This shut-off valve should be installed outside the analyzer house near the combustion gas supply.

# FID analyzer Fidas24 NMHC

## Measuring principle

Non-methane flame-ionization detector
(NMHC = Non-Methane Hydrocarbons)

The analyzer module complies with the requirements for measuring instruments with flame ionization detection according to EN 12619.

A non-methane converter is used in the Fidas24 NMHC to measure $CH_4$.

## Sample components and measurement ranges

**Sample components**

Hydrocarbons.
The $CH_4$/NMHC ratio must be in the 1:9 to 9:1 range.

- Maximum concentration $CH_4$:
  26500 mg org. C/$m^3$ or 50000 ppm C1.
- Maximum concentration NMHC:
  5000 mg org. C/$m^3$ or 9330 ppm C1.

The concentration of the gas components in the sample gas path must not exceed the temperature-dependent LEL. The analyzer temperature is 180 °C.

**Number of sample components**

2 sample components: $CH_4$ and THC.
The calculated non-methane portion of the hydrocarbons is output as the 3rd NMHC component.

**Smallest measuring range**

0 to 5 to 0 to 1500 mg org. C/$m^3$ or
0 to 10 to 0 to 3000 ppm C1

**Largest measuring range $CH_4$ and THC**

0 to 50 to 0 to 25000 mg org. C/$m^3$ or
0 to 100 to 0 to 50000 ppm C1

**Largest measuring range NMHC**

0 to 5000 mg org. C/$m^3$ or
0 to 10000 ppm C1

**Measuring range quantity and measuring range limits**

1 to 4 measuring ranges
The measuring ranges are factory-set per customer order.

# … FID analyzer Fidas24 NMHC

## Stability

The following data only applies if all the influence variables (e.g. flow, temperature and air pressure) are constant. They relate to the smallest measurement range.

They apply to measuring ranges ≥ 50 mg org. C/$m^3$; for smaller measuring ranges these only apply if they are factory-set in accordance with the order.

**Linearity error**

≤ 2 % of span to 5000 mg org. C/$m^3$,
this value applies in one (calibrated) measuring range

**Repeatability**

≤ 0.5 % of measurement range

**Zero drift**

≤ 0.5 mg org. C/$m^3$ per week

**Span drift**

≤ 0.5 mg org. C/$m^3$ per week

**Output fluctuation at zero point (2 σ)**

≤ 0.5 % of span at electronic $T_{90}$-time = 20 s

**Detection limit (4 σ)**

≤ 1 % of span at electronic $T_{90}$ time = 20 s

## Influences

**Oxygen dependence**

≤ 2 % of measured value for 0 to 21 vol. % $O_2$ or
≤ 0.3 mg org. C/$m^3$, the larger value applies in each case

**Temperature effect**

- Ambient temperature in permitted range
  - Standard: 5 to 45 °C
  - Measuring ranges < 100 ppm: 5 to 40 °C
- At the zero point and on the sensitivity:
  ≤ 2 % of the measured value per 10°C or ≤ 300 ppb C1 per 10°C

**Power supply effect**

- DC 24 V ± 5 %: ≤ 0.2 % of the span or
- AC 230 V ± 10 %: ≤ 0.2 % of the span or
- AC 115 V ± 10 %: ≤ 0.2 % of span

## Dynamic response

**Warm-up time**

≤ 2 hours

**$T_{90}$time**

$T_{90}$ < 2.5 s via bypass, $T_{90}$ < 3 s via converter at sample gas flow = 80 l/h and electronic $T_{90}$ time = 1 s

**Switchover time**

Between bypass and converter typically 20 s, depending on measuring range

**Converter operating time**

The catalyst is a consumable material.
Its service life depends on the concentration of the converted hydrocarbons.
Catalyst poisons (e.g. $SO_2$, HCl, $H_2S$, halogenated hydrocarbons, heavy metals) will shorten the converter service life. Their respective concentration should always be < 20 mg/$m^3$.
It is recommended to test the converter function once a year.

## Calibration

**Zero-point calibration**

With synthetic air or catalytically purified air, depending on application

**Sensitivity calibration**

With methane or propane in air, depending on application

## Materials

**Analyzer, gas lines and connectors**

Stainless steel 1.4305 and 1.4571, FPM, PTFE, FFKM

## Sample gas conditions

### Sample gas inlet conditions

| Fidas24 – sample gas input conditions | |
|---|---|
| **Temperature** | ≤ Thermostat temperature (thermostat temperature for sample gas path, detector and air injector ≤ 200 °C, factory-set at180 °C) |
| **Inlet pressure** | $p_{abs}$ = 800 to 1100 hPa |
| **Flow rate** | approx. 80 to 100 l/h at atmospheric pressure (1000 hPa) |
| **Humidity** | ≤ 40 % $H_2O$ |

**Further properties of the sample gas**

The sample gas must not be explosive at any time.

The analyzer module must not be used for the measurement of gases containing organometallic compounds, e.g. lead-containing fuel additives or silicone oils.

**Flammable gases – Fidas24 NMHC**

The gas analyzer may be used for the measurement of flammable gases provided that the total flammable portion does not up-scale 5 vol.-% $CH_4$ or does not up-scale C1 equivalents.

**Requirements for the sample gas outlet**

The analyzer is operated under atmospheric pressure; the sample gas outlet is open to atmosphere.

## Operational gases

### Instrument air

| Parameter | Value/Description |
|---|---|
| Quality | According to ISO 8573-1 Class 2<br>Particle size: max. 1 µm,<br>Particle density: max. 1 mg/m$^3$,<br>Oil content: max. 0.1 mg/m$^3$,<br>Dew point: At least 10 °C below the lowest expected ambient temperature |
| Inlet pressure $p_e$ | 4000 hPa, ±500 hPa |
| Flow rate | Typically approx. 1800 l/h (1200 l/h for the air jet injector and approx. 600 l/h for the housing purge),<br>max. approx. 2200 l/h (1500 l/h + 700 l/h) |

### Combustion air

| Parameter | Value/Description |
|---|---|
| Quality | • Synthetic air or catalytically purified air<br>• Organic hydrocarbon content: < 1 % of the measuring range |
| Inlet pressure $p_e$ | 1200 hPa, ±100 hPa |
| Flow rate | < 20 l/h |

### Combustion gas

**Note**

An $H_2$/He mixture may only be used if the gas analyzer has been ordered and delivered in the intended version.

| Combustion gas parameter | | |
|---|---|---|
| Quality | Hydrogen ($H_2$), Quality 5.0 | $H_2$/He mix (40 %/60 %) Quality 5.0 |
| Inlet pressure $p_e$ | 1200 hPa, ±100 hPa | 1200 hPa, ±100 hPa |
| Maximum combustion gas flow | approx. 3 l/h | approx. 10 l/h |

**Note**

A flow limiter must be provided on the hydrogen supply, see **Safe operation of the gas analyzer** on page 38.

# … FID analyzer Fidas24 NMHC

## … Operational gases

### Test gases

| **Test Gases for Zero Calibration** | |
|---|---|
| Quality | Nitrogen, Quality 5.0, synthetic air or catalytically cleaned air with an organic C < 1 % MBU. |
| Inlet pressure $p_e$ | 1000 ±100 hPa |
| Flow rate | 130 to 250 l/h |

| **Test gases for endpoint calibration** | |
|---|---|
| Sample components $CH_4$ | $CH_4$ in air |
| THC sample components | $C_3H_8$ in air or $CH_4$ in air |
| Components for substitute gas calibration (if configured in accordance with the order): | $CH_4$ in air |
| Inlet pressure $p_e$ | Depressurized |
| Flow rate | At least 20 l/h more than the sample gas flow |

| **Test gases for converter effectiveness testing** | |
|---|---|
| Test gas | $CH_4$ or $C_2H_6$ or $C_3H_8$ in air (separate test gas bottles), connection via a bypass |
| Inlet pressure $p_e$ | Depressurized |
| Flow rate | At least 20 l/h more than the sample gas flow |

## Gas and Electrical Connections

Refer to **Gas and electric connections Fidas24 and Fidas24 NMHC** on page 86.

## Safe operation of the gas analyzer

The device concept ensures that a concentration of combustible gas or an explosive mixture of combustible gas and ambient air cannot occur in the interior of the gas analyzer during normal operation.

The interior of the gas analyzer cannot be allocated to an (explosion protection) zone; an explosive gas mixture cannot escape to the outside.

The end user must make the following provisions to ensure safe operation of the gas analyzer:

- The combustion gas flow rate must be limited to a maximum of 10 l/h $H_2$ or 25 l/h $H_2$/He mixture. For this purpose, the end user has to provide suitable measures outside the gas analyzer.
- A shut-off valve must be installed in the combustion gas supply line to increase safety in the following operating conditions: shutting down the gas analyzer, failure of the instrument air supply, leakage in the combustion gas feed path inside the gas analyzer. This shut-off valve should be installed outside the analyzer house near the combustion gas supply.

# Laser analyzer LS25

## Overview




**Figure 1: AO2000-LS25**

The LS25 is an external AO2000 laser analyzer module for an in situ or cross-stack application directly on site in the process, additional gas extraction and gas conditioning systems are therefore not necessary. This improves the availability of measurements and eliminates the risk of sample handling failure. The analyzer is mounted directly on flanges, purge gas connections and a tilting mechanism for easy alignment are included in the purge flange.

Rough process conditions are not a problem for the LS25, so measurements are possible, for example, under high process temperatures, high process pressures, high dust exposure and even with corrosive gases. Thanks to the tunable diode laser absorption spectroscopy (TDLAS), a non-contact optical measurement method, the analyzer remains unaffected by impurities and corrosive substances and therefore does not need regular maintenance.

Continuous purging of the optical windows prevents dust and other impurities from settling and the measuring gas from coming into contact with the optical windows. Measurement as an extractive system with an external measuring cell is of course also possible.

| Highlights | Typical applications | Customer benefits |
|---|---|---|
| Line measurement over the complete measuring distance | Metal industry | In situ measurement |
| Fast reaction time | Power plants | fast process optimization |
| contactless measurement | Waste incineration plants | proven technology |
| No interference with associated gases | Chemical industry | Low maintenance costs |
| no zero point drift | Petrochemical industry | Reduction of emissions into the environment |
| Available for tough process conditions | Cement industry | Increased safety |
| ATEX, IECEX and CSA certified | Pulp & Paper Industry | Increased system availability |

## Measuring principle

The LS25 laser analyzer module is based on a measuring principle called single-line spectroscopy.
One single target gas absorption line with no interference is chosen in the near infrared spectral range.

A single mode diode laser operating around room temperature scans the respective absorption line.
The absorption caused by the sample gas is measured by means of a receiver located opposite, and the concentration is determined based on this.
An automatic correction of pressure and temperature changes is possible.

## Sample components and measurement ranges

The LS25 laser analyzer module has one physical measurement range per sample component. The indicated measurement range can be freely calibrated within the physical measurement range.
The smallest detection limits and corresponding measuring ranges are shown in the table below.
Other sample components on request.

The optical path length is typically between 0.5 and 15.0 m.
Application-related deviations can occur.
In some cases, additional measures must be taken to achieve the smallest measuring ranges:
The measurement of low $O_2$ and $H_2O$ concentrations require device and process purging with nitrogen.
Actual detection limit for a specific application will depend on the process conditions (pressure, temperature and gas composition) and optical path length. There are different device versions with different detection limits and process conditions for certain sample components.
Min. measurement range, max. pressure and max. temperature cannot necessarily be realized simultaneously.
The maximum pressure and temperature given are physical (spectroscopic) limits. Applications with increased temperature or pressure or with corrosive or flammable gas may require additional equipment.

# … Laser analyzer LS25

## … Sample components and measurement ranges

**Sample components and measurement ranges**

Other sample components and higher pressures on request.

| Sample components* | Smallest measurement range | Max. abs. Pressure | Max. temperature |
|---|---|---|---|
| $O_2$ | 0 to 1 vol.% | 10 bar | 1500 °C |
| $NH_3$ | 0 to 15 ppm | 2 bar | 500 °C |
| HCl | 0 to 5 ppm | 2 bar | 600 °C |
| HF | 0 to 2 ppm | 2 bar | 400 °C |
| $H_2S$ | 0 to 300 ppm | 2 bar | 300 °C |
| $H_2O$ (ppm) | 0 to 10 ppm | 2 bar | 1000 °C |
| $H_2O$ (vol.%) | 0 to 0.5 vol.% | 2 bar | 1500 °C |
| CO (ppm) | 0 to 30 ppm | 2 bar | 1500 °C |
| CO (vol.%) | 0 to 0.3 vol.% | 2 bar | 1500 °C |
| $CO_2$ (ppm) | 0 to 100 ppm | 2 bar | 300 °C |
| $CO_2$ (vol.%) | 0 to 1 vol.% | 2 bar | 1500 °C |
| NO | 0 to 1000 ppm | 2 bar | 350 °C |
| $N_2O$ | 0 to 100 ppm | 2 bar | 200 °C |
| $NO_2$ | 0 to 500 ppm | 2 bar | 200 °C |
| HCN | 0 to 30 ppm | 2 bar | 300 °C |
| $CH_3I$ | 0 to 100 ppm | 1.5 bar | 200 °C |
| $CH_4$ (vol.%) | 0 to 1 vol.% | 3 bar | 1000 °C |
| $CH_4$ (ppm) | 0 to 20 ppm | 3 bar | 300 °C |
| $CH_2O$ | 0 to 100 ppm | 2 bar | 200 °C |
| $C_2H_4$ | 0 to 100 ppm | 1.5 bar | 150 °C |
| $C_2H_4O$ | 0 to 100 ppm | 1.5 bar | 150 °C |
| $NH_3 + H_2O$ | 0 to 20 ppm<br>0 to 5 Vol.-% | 1.5 bar | 600 °C |
| $HCl + H_2O$ | 0 to 10 ppm<br>0 to 10 Vol.-% | 1.5 bar | 600 °C |
| $HF + H_2O$ | 0 to 3 ppm<br>0 to 2 Vol.-% | 1.5 bar | 400 °C |
| $HCN + NH_3$ | 0 to 30 ppm<br>0 to 300 ppm | 2 bar | 300 °C |
| CO (vol.%) + $CO_2$ (vol.%) | 0 to 1 Vol.-%<br>0 to 1 Vol.-% | 1.5 bar | 600 °C |
| $HCl + CH_4$ | 0 to 300 ppm<br>0 to 0.2 Vol.-% | 1.5 bar | 200 °C |
| CO (ppm) + $CH_4$ | 0 to 20 ppm<br>0 to 200 ppm | 1.5 bar | 1500 °C |
| CO (ppm) + $H_2O$ (vol.%) | 0 to 300 ppm<br>0 to 10 Vol.-% | 1.5 bar | 1500 °C |
| $O_2$ + Temp. | 0 to 1 vol.%<br>0 to 100 °C | 2.0 bar | 1500 °C |

**Note**

The specified data are based on a 1 m optical path length, 25 °C sample gas temperature and a sample gas pressure of 1 bar abs., sample gas in nitrogen with a confidence level of 95 %, deviations from this are possible depending on the process.

**Number of measuring ranges**

1 range per sample component, 1 x transmission

**Largest measuring range**

Largest measuring range is generally 100 times the minimum measuring range for the same conditions. Larger measuring ranges are possible, for example by adjusting the optical path length or choosing a different absorption line, please contact ABB in this regard.

## Sample gas properties

Maximum process gas temperature and pressure are given in the **Sample components and measurement ranges** on page 47 table.

Quantification of dust/particle concentration in the sample gas is necessary in order to determine max OPL. The maximum dust concentration must be checked by ABB Analytical.

## Purge gasproperties

The purge gas (instrument air or nitrogen, depending on the process) must be free of oil and dust.
Recommendation: in accordance with ISO 8573.1 Class 2–3

The process purging gas flow is between 10 and 50 l/min, depending on the application.
The analyzer purging gas flow (Ex pxb – Zone 1 devices) must be at least 11 l/min or 48 l/min.

## Stability

**Linearity error**

≤ 1 % of span

**Repeatability**

± Detection limit or ± 1 % of reading, whichever is greater (depending on the gas and application)

**Zero drift**

Due to the measuring principle, there is no zero point drift.

**Output signal fluctuation (2 σ)**

≤ 0.5 % of smallest measuring range

**Detection limit (4 σ)**

≤ 1 % of smallest measuring range

## Influences

**Flow effect**

No effect on the measurement, but the flow will determine the amount of purge gas needed.

**Associated gas effect/cross sensitivity**

No cross sensitivity within normal operation conditions.

**Temperature influence (depending on application)**

- Ambient temperature in permitted range:
  No significant influence
- The temperature of the measured gas is taken into account by the analyzer so that the measured value can be corrected internally.
  - If the gas temperature is constant, a fixed value can be stored in the analyzer.
  - If the gas temperature varies, an external temperature signal (4 to 20 mA) can be used for internal compensation.

**Influence of pressure (depending on application)**

- At zero point:
  No influence effect.
- The pressure of the measured gas is taken into account by the analyzer so that the measured value can be corrected internally.
  - If the gas pressure is constant, a fixed value can be stored in the analyzer.
  - If the gas pressure varies, an external pressure signal (4 to 20 mA) can be used for internal compensation.

**Power supply effect**

DC 24 V ±5 %:
≤ 0.2 % of measuring span

## Dynamic response

**Warm-up time**

< 15 min (depending on environment)

**Response time**

< 2 s

## Calibration

**Zero point check**

With nitrogen or with ambient air free of sample components. The zero point cannot be calibrated. Due to the measuring principle, there is no zero point drift.

**End point check**

A review of the calibration data is recommended every 6 to 12 months, depending on the application

**Validation**

Depending on the application, online validation is possible using the optional internal or external validation cell

**Calibration interval**

Depending on the application;
typically once or twice a year

**End pointcalibration**

With test gas and a calibration cell.

## Materials

**Purge and alignment unit**

Stainless steel 316SS.

**Window**

BK7 glass, optional: Synthetic quartz glass or sapphire glass

# … Laser analyzer LS25

## Mounting

**Installation site requirements**

The mounting location strongly influences the measurement result. The measurement gas must be well stirred at the selected location to produce a representative measurement result.

- Stratification in the measurement gas path results in erroneous measurement.
- If the measurement gas is charged with dust, it is recommended to mount the LS25 at right angles to the process gas flow.

**Adjustment or installation flanges**

Adjustment and installation flanges are available in the following variants and are compatible with:

- DN 50/PN 10 to 40, DN 80/PN 10 to 40, DN 100/PN 10 to 40,
- ANSI 2”/150 lbs, ANSI 2”/300 lbs, ANSI 3”/150 lbs,
- ANSI 3”/300 lbs, ANSI 4”/150 lbs, ANSI 4”/300 lbs

**Note**

The maximum permissible process pressure for the alignment flange is 1.5 bar absolute; an isolation flange must be used for higher pressures.

**Alignment tolerance**

Flanges parallel within 1.5°

**Purging of windows**

Compressed air or nitrogen, dry and oil-free (see **Purge gasproperties** on page 40)

**Gas ports for purging**

Choice of 6, 8, 10, 12 mm, ⅜” or ¼” Swagelok® fitting. For connection drawing, see **Flange and housing purge connection diagram** on page 46.

**Weight**

- Transmitter unit: 6.3 kg; Ex version: 7.9 kg
- Receiver unit: 3.9 kg
- Power supply units: Traco 1.6 kg or Pepperl+Fuchs 5 kg

**Dimensions**

Refer to **Dimensions, position of the purging connections and installation of cables** on page 45.

## Electrical connections

**Connection to AO2000 system housing**

Ethernet 10/100BASE-T; RJ45 plug;
cable length: Min. 15 m, max. 100 m

**Connection to receiver unit**

15-pole female Sub-D connector
Cable length: Min. 5 m, max. 150 m

**Power supply, external pressure and temperature signals**

15-pole male Sub-D connector

- Cable length laser unit power supply: Min. 3 m, max. 100 m

**Note**

With Ex devices, the cables are not connected via connectors, but are already connected by means of a cable gland and internal terminals upon delivery.

**Service computer**

RS232, 9-pin female Sub-D connector; Ethernet

**Connection diagrams**

Refer to **Dimensions, position of the purging connections and installation of cables** on page 45.

## Power supply

**Input voltage**

The transmitter unit is supplied with voltage via an external power supply unit. The power supply unit is optionally included in the scope of delivery

- Transmitter unit: 24 V DC, ±5 %
- Power supply unit: Input 85 to 264 V AC, output 24 VD C

**Power**

Max. 20 W

## Use in Potentially Explosive Atmospheres

The LS25 has ATEX, IECEx and CSA certificates for use in potentially explosive atmospheres.

The external power supply is suited for use in ATEX Zone 2 and CSA Class I, Division 2.

### ATEX/IECEx Zone 1, 21

| **ATEX Marking** | |
|---|---|
| ATEX certificate: | Presafe 20 ATEX 69761X |
| Ambient temperature $T_{amb.}$ | −20°C ≤ Ta ≤ +55°C |
| Ex II 2 G Ex pxb [op is Ga] IIC T4 Gb | |
| Ex II 2 D Ex pxb [op is Da] IIIC T100°C Db | |

**Table 1: Ex mark according to ATEX**

| **IECEx marking** | |
|---|---|
| IECEx certificate: | IECEx PRE 20.0072X |
| Ambient temperature $T_{amb.}$ | −20°C ≤ Ta ≤ +55°C |
| Ex pxb [op is Ga] IIC T4 Gb | |
| Ex pxb [op is Da] IIIC T100°C Db | |

**Table 2: Ex marking according to IECEx**

### ATEX/IECEx Zone 2, 22

| **ATEX Marking** | |
|---|---|
| ATEX certificate: | Presafe 16 ATEX 8621X |
| Ambient temperature $T_{amb.}$ | −20°C ≤ Ta ≤ +55°C |
| Ex II 3 G Ex ec nC [op is Ga] IIC T4 Gc | |
| Ex II 3 D Ex tc [op is Da] IIIC T100°C Dc | |

**Table3: Ex marking in accordance with ATEX**

| **IECEx marking** | |
|---|---|
| IECEx certificate: | IECEx PRE 20.0071X |
| Ambient temperature $T_{amb.}$ | −20°C ≤ Ta ≤ +55°C |
| Ex ec nC [op is Ga] IIC T4 Gc | |
| Ex tc [op is Da] IIIC T100°C Dc | |

**Table4: Ex marking in accordance with IECEx**

### TRACO POWER TEX 120-124 power supply unit

| **ATEX Marking** | |
|---|---|
| ATEX certificate: | EPS 08 ATEX 1 137 X |
| Ambient temperature $T_{amb.}$ | −40°C to 70°C |
| Ex II 3G Ex ec IIC T4 Gc | |

**Table5: Ex marking in accordance with ATEX**

The current certificates and approvals for the power supply unit are available for download at the following link:

| **QR code** | **link** |
|---|---|
| | www.tracopower.com/series/tex-120 |

**Table 6: Certificates TRACO POWER TEX 120-124**

### Power supply unit Pepperl+Fuchs PSC2.PS.GR.18.36.17.D-Y0168136

| **ATEX Marking** | |
|---|---|
| ATEX certificate: | CESI 17 ATEX 013 X |
| Ambient temperature $T_{amb.}$ | −25°C to 40°C |
| Ex II 3 G D | |

**Table7: Ex marking in accordance with ATEX**

| **IECEx marking** | |
|---|---|
| IECEx certificate: | IECEx CES 18.0012X |
| Ambient temperature $T_{amb.}$ | −25°C to 40°C |
| Ex ec nC IIC T4 Gc | |
| Ex tb IIIC T130°C Db | |

**Table8: Ex marking in accordance with IECEx**

The certificates for the power supply unit are available for download at the following link:

| **QR code** | **link** |
|---|---|
| | CE/AO2000-LS25/POWER-SUPPLY_4WAY |

**Table9: Certificates Pepperl+Fuchs PSC2.PS.GR.18.36.17.D-Y0168136**

# … Laser analyzer LS25

## … Use in Potentially Explosive Atmospheres

**CSA certification, gas analyzer**
CSA Class I Division 2, Groups A, B, C, D, Temperature class T4,
maximum ambient temperature +55°C, electrical devices

Applicable requirements:

**Classes 2252 06 and 2252 86**

- CAN/CSA C22.2 No. 61010-1-12,
  UPD1: 2015, UPD2: 2016, AMD1: 2018
  Safety Requirements for Electrical Equipment for Measurement, Control, and Laboratory Use, Part 1: General Requirements
- UL 61010-1, 3rd edition (2012), AMD1: 2018
  Safety Requirements for Electrical Equipment for Measurement, Control, and Laboratory Use, Part 1: General Requirements

**Classes 2258 02 and 2258 82**

- CSA Standard C22.2 No. 0-10
  General Requirements - Canadian Electrical Code Part II
- CSA Standard C22.2 No.0.4-M2004
  Bonding of Electrical Equipment
- CSA Standard C22.2 No. 213-M1987
  Non-Incendive Electrical Equipment for Use in Class I, Division 2 Hazardous Locations
- CAN/CSA C22.2 No. 61010-1-12,
  UPD1: 2015, UPD2: 2016, AMD1: 2018
  Safety Requirements for Electrical Equipment for Measurement, Control, and Laboratory Use, Part 1: General Requirements
- UL 61010-1, 3rd edition (2012), AMD1: 2018
  Safety Requirements for Electrical Equipment for Measurement, Control, and Laboratory Use, Part 1: General Requirements
- ANSI/ISA-12.12.01-2007
  Nonincendive Electrical Equipment for Use in Class I and II, Division 2 and Class III, Divisions 1 and 2 Hazardous Classified) Locations

Certificate no.:
80168707

**CSA certification, power supply unit**
**TRACO TEX 120-124**
The power supply unit has its own CSA approval, which is registered under UL File e213613 (Class I, Division 2, group A, B, C & D, temp. Class T4).

The current certificates and approvals for the power supply unit are available for download at the following link:

| QR code | link |
|---|---|
| | www.tracopower.com/series/tex-120 |

**Table 10: Certificates TRACO POWER TEX 120-124**

**Pepperl+Fuchs PSC2.PS.GR.18.36.17.D-Y0168136**

| | |
|---|---|
| Part no. | PSC2.PS.GR.18.36.17.D-Y0168136 |
| Drawing | CS-CXZ8 |
| System bus, computer interfaces | 240 V AC, 6 A, 27 W |
| SCCR | 16 kA |
| Class I Division 2 GROUPS ABCD T4 | |
| Type 4X –25°C <= Ta <= +40°C | |

**Table11: CSA certification**

**Certificate**
The certificates for the power supply unit are available for download at the following link:

| QR code | link |
|---|---|
| | CE/AO2000-LS25/POWER-SUPPLY_4WAY |

**Table12: Certificates Pepperl+Fuchs PSC2.PS.GR.18.36.17.D-Y0168136**

## Dimensions, position of the purging connections and installation of cables

(Deviations in explosion-proof designs and compact variants are possible)

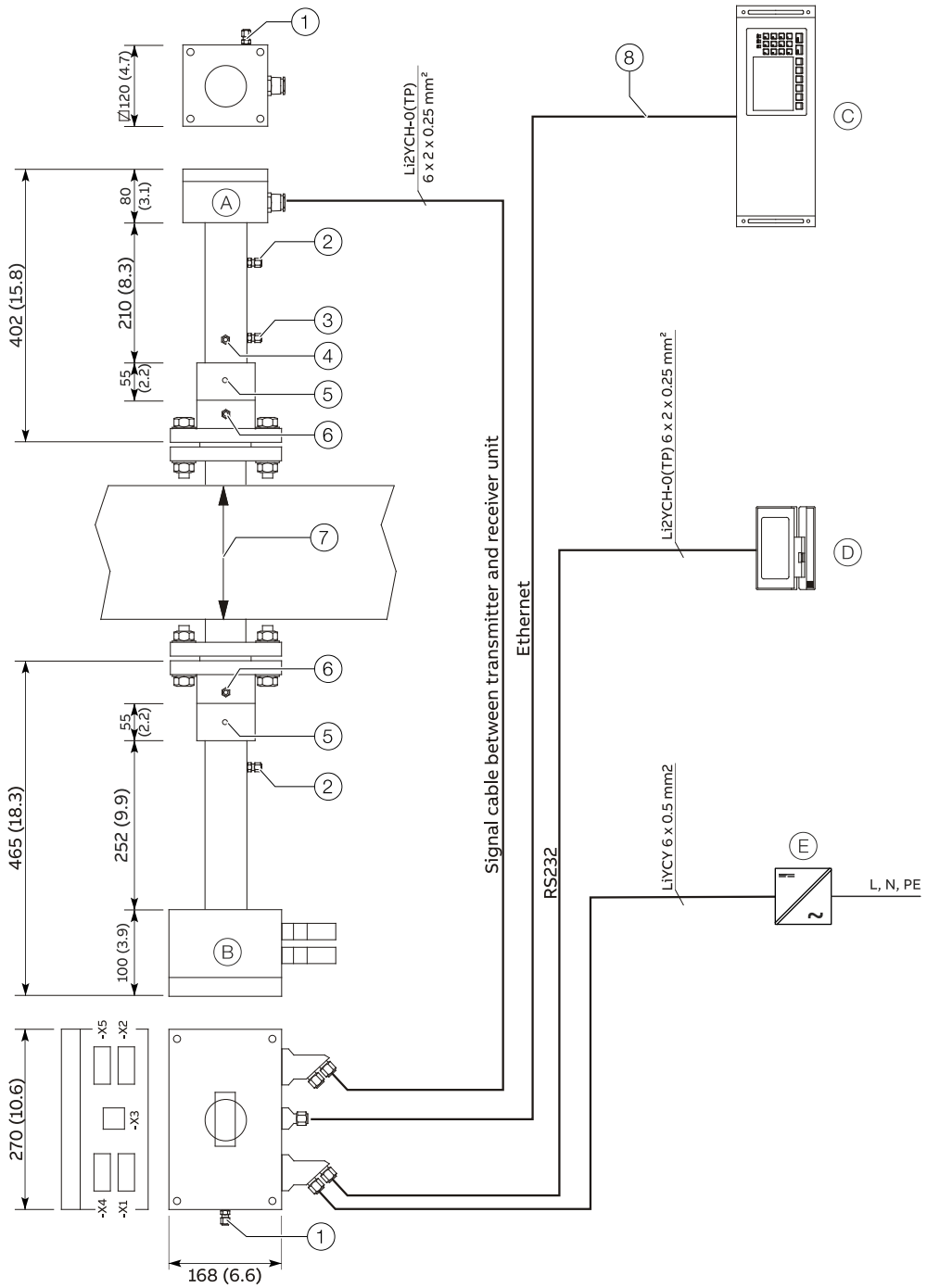


- (A) Receiver unit
- (B) Transmitter unit
- (C) AO2000 central unit
- (D) Service PC
- (E) Power supply unit
- (1) Purge gas outlet (housing purging), Ø 6 mm
- (2) Purge gas inlet (housing purging), Ø 6 mm
- (3) Calibration gas outlet, Ø 6 mm
- (4) Calibration gas outlet, Ø 6 mm
- (5) Tap hole M8
- (6) Purge gas inlet (flange purging), Ø 10 mm
- (7) Optical distance 0.5 to 15 m (1.6 to 49.2 ft)
- (8) CAT5 cable, for outdoor use or for direct earthing, with double PVC sheath

**Figure 2: Block diagram of AO2000-LS25**

# … Laser analyzer LS25

## … Dimensions, position of the purging connections and installation of cables

### Flange and housing purge connection diagram

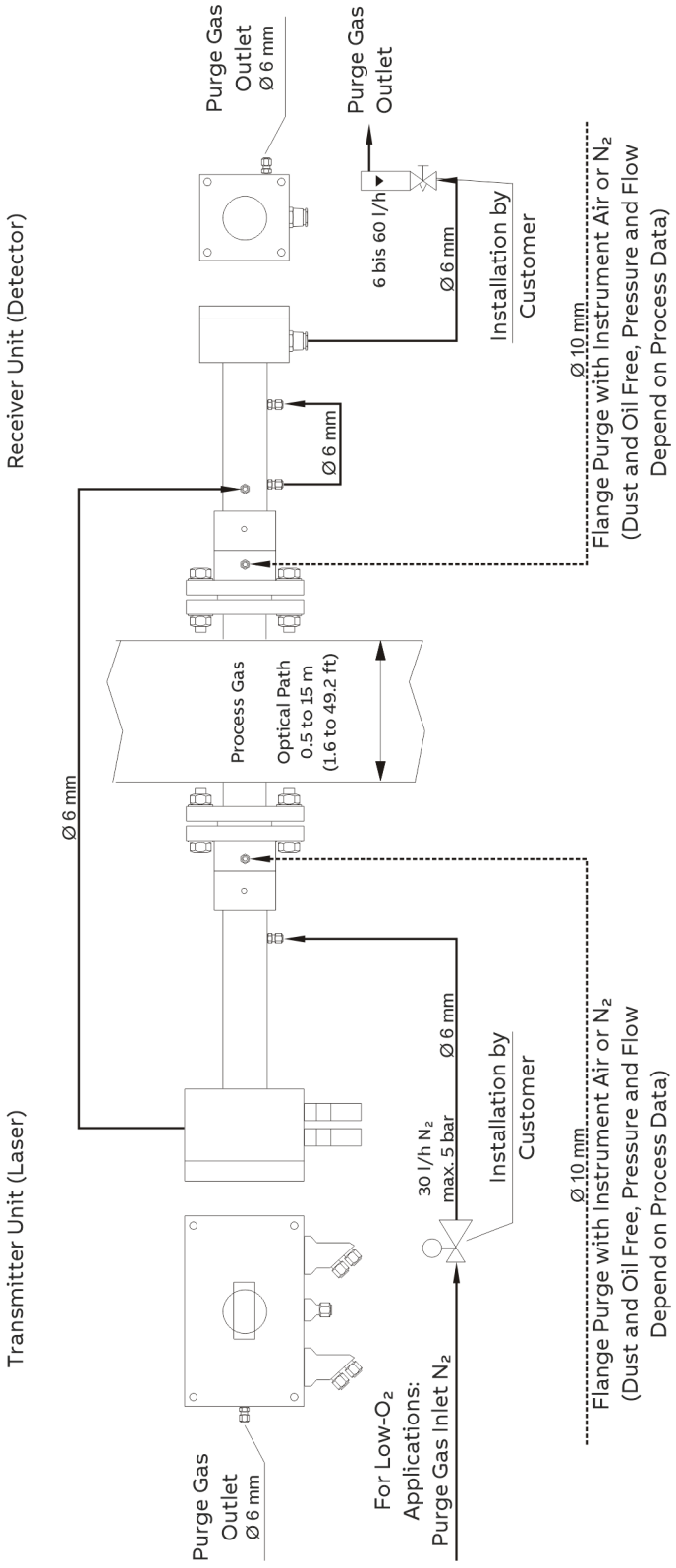


**Figure 3: Flange and housing purge connection diagram**

# Electrochemical oxygen sensor

**Note**

- The oxygen sensor is always associated with an analyzer module and must be installed in the same housing with that analyzer module.
- The oxygen sensor can be used with the following analyzer modules:
  - Uras26, Limas21 UV with gas lines made of FPM.

## Measuring principle

Electrochemical oxygen sensor

## Sample components and measurement ranges

**Sample component**

Oxygen ($O_2$)

**Smallest measuring range**

0 to 5 vol.% $O_2$

**Measuring range quantity and measuring range limits**

1 to 2 measuring ranges
adjustable from 0 to 5 vol. % $O_2$ to 0 to 25 vol. % $O_2$

## Stability

The following data only applies if all the influence variables (e.g. flow, temperature and air pressure) are constant. They relate to the smallest measurement range.

**Linearity error**

≤ 1 % of measuring span

**Repeatability**

≤ 0.5 % of span

**Zero drift**

Stable over long-term due to absolute zero point

**Span drift**

≤ 1 % of the measurement range per week

**Output signal fluctuation (2 σ)**

≤ 0.2 % of the total measuring range at electronic $T_{90}$-time (static/dynamic) = 5/0 s

**Detection limit (4 σ)**

≤ 0.4 % of the total measuring range with electronic $T_{90}$-time (static/dynamic) = 5/0 s

## Influences

**Flow effect**

Flow rate in the 20 to 100 l/h range:
≤ 2 % of the total measuring range

**Temperature effect**

Ambient temperature in the permissible range:
≤ 0.2 vol.% $O_2$ per 10 °C

**Air pressure effect**

- At the zero point:
  no influence effect
- On sensitivity without pressure correction:
  ≤ 1 % of the measured value per 1 % of air pressure change
- on sensitivity without pressure correction
  ≤ 0.2 % of the measured value per 1 % air pressure change
  Pressure correction is only possible if the oxygen sensor is connected to an analyzer module with an integral pressure sensor.

**Power supply effect**

Voltage and frequency in the permissible range:
≤ 0.2 % of the total measuring range

## Dynamic response

**$T_{90}$time**

$T_{90}$ ≤ 30 sec, depending on sample gas flow and system layout

## Calibration

| Calibration | Test gas |
|---|---|
| Zero-point calibration | The oxygen sensor zero is not calibrated since it is fundamentally stable. |
| End-point calibration | Ambient air with 20.96% Vol.-% $O_2$ or with synthetic air |

## Materials

- Sensor:
  polystyrene ABS, PTFE, FPM (fluoro rubber)
- Housing:
  PVC-U, FPM gasket (fluoro rubber)
- Gas connections:
  Stainless steel 1.4571 (AISI 316Ti)

# … Electrochemical oxygen sensor

## Sample gas conditions

### Sample gas inlet conditions

| **Electrochemical oxygen sensor - Sample gas input conditions** | |
|---|---|
| **Temperature** | |
| If the sample gas taken from the process is hotter than the coldest point in the sample gas path, it can condensate there, if the gas contains components that can condense. Therefore, the sample gas dew point should be at least 5 °C below the lowest temperature throughout the sample gas path. Otherwise a sample gas cooler or condensate trap is an absolute requirement. | |
| **Moisture content** | |
| $H_2O$ dew point ≥ 2 °C<br>The oxygen sensor may not be used with dry sample gases. | |
| **Pressure** | |
| Internal pressure drop: | < 5 hPa at standard flow rate of 60 l/h |
| **Flow rate** | 20 to 100 l/h |

**Associated gas**

The oxygen sensor may not be used if the associated gas contains the following components:

$H_2S$, compounds containing chlorine or fluorine, heavy metals, aerosols, mercaptans, alkaline components

**Requirements for the sample gas outlet**

The analyzer is operated under atmospheric pressure; the sample gas outlet is open to atmosphere.

# Pneumatic Module

**Note**

- The pneumatics module is always associated with an analyzer module and must be installed in the same housing with that analyzer module.
- The pneumatics module cannot be used when stainless steel tubes are used for the internal gas lines.
- The pneumatics module cannot be used with the following analyzer modules:
  - Limas21 UV, Limas21 HW with stainless steel, PFA or PTFE gas lines,
  - Fidas24, Fidas24 NMHC,
  - Analyzer modules in category 2G.

## Test gas supply

**Version**

Choice of one or three 3/2-way solenoid valves

**Power**

Approx. 3 W per solenoid valve

**Materials**

PVDF, FPM, aluminum, stainless steel 1.4305

## Fine filtration

**Version**

Disposable filter with borosilicate glass microfiber filter element

**Retention rate**

99.99 % for particles > 0.1 µm

**Materials**

Polyamide, borosilicate glass with PVDF binder

## Gas supply

**Version**

Magnetic piston pump

**Feed rate**

Max. 60 l/h, depending on analyzer module and inlet/outlet pressure

**Flow**

Adjustable

**Power**

approx. 10 W

**Materials**

PVDF, EPDM, stainless steel 1.4571

## Flow monitor

**Version**

Miniature flow sensor

**Display and limit value monitoring**

Configurable

**Materials**

$Al_2O_3$, silicon, gold, GFK

## Pressure monitoring

**Pressure sensor**

(Optional) for additional monitoring tasks,
e.g. pressure measurement in the second gas path of the Uras26 analyzer module

## Sample gas inlet conditions

The pneumatics module must not be used for measurement of flammable gases and ignitable gas/air or gas/oxygen mixtures.

| **Pneumatic module – sample gas inlet conditions** | |
|---|---|
| **Temperature** | |
| 5 to 45 °C (41 to 113 °F)<br>The sample gas dew point should be at least 5 °C below the temperature throughout the sample gas path. Otherwise a sample gas cooler or condensate trap is required. | |
| **Pressure** | |
| Inlet pressure | $p_e$ = −80 to +20 hPa |
| **Flow rate** | 30 to 60 l/h |

**Corrosive gases**

Corrosive associated gas components and aerosols must be cooled or undergo prior absorption.

# Use in potentially explosive atmospheres

## Explosion protection according to ATEX / IECEx

**Uras26, Magnos28, Caldos25 and Caldos27**
The AO2000 series gas analyzers with Uras26, Magnos28, Caldos25 and Caldos27 in category 3G for measurement of flammable and non-flammable sample gas ('Safety concept') satisfy the European standards EN 60079-15, EN 60079-2, EN 60664-1.

**Ex marking**
II 3G Ex nA pyb IIC T4 Gc

**Uras26, Magnos28, Magnos27, Caldos25 and Caldos27**
The AO2000 Series gas analyzers with Uras26, Magnos28, Magnos27, Caldos25 and Caldos27 in category 3G for measurement of non-flammable sample gas satisfy the European standards EN 60079-15, EN 60664-1.

**Ex marking**
II 3G Ex nA nC IIC T4 Gc

**LS25 laser analyzer module**
The LS25 analyzer module in category 3G for measurement of flammable and non-flammable sample gas satisfy the European standards EN 60079-0 + A11, EN 60079-15, EN 60079-28, EN 60079-31.

**Ex marking**
See **Use in Potentially Explosive Atmospheres** on page 43.

**AO2040 Ex-p**
The AO2040 Ex-p series gas analyzers with Uras26, Limas21, Magnos27/28, Caldos25/27, Fidas24 and ZO23 in category 2/3G and 2/3D for measurement of flammable and non-flammable gases satisfy the European standards EN 60079-2, EN 60079-11.

**Ex marking**
See **Design AO2040 Ex-p for use in Zone 1, 21 and Zone 2, 22** on page 55.

## Explosion protection according to U.S. and Canadian standards – CSA

The AO2000 Series gas analyzers with Uras26, Limas21 UV, Limas21 HW, Magnos28, Magnos27, Caldos25, Caldos27 and LS25 are certified for use in potentially explosive atmospheres Class 1, Division 2, Groups A, B, C, and D, Temperature code T4.

Housing versions not equipped with conduit entries ('conduit entries') must be installed in a suited cabinet with provisions electrical connections in accordance with Division 2 wiring methods.

The gas analyzer in the variant AO2040-Fidas24 Ex is certified for use in Class 1, Zone 1 / 2 or Zone 21 / 22, temperature code T3 or T195°C.

## Explosion protection for the customs union of Russia, Belarus and Kazakhstan – EAC TR CU

The AO2000 Series gas analyzers in the 'Safety Concept' version are certified for use in Zone 2 environments.

The AO2040-Fidas24 Ex is certified for use in Zone 1 or Zone 2 environments.

## Explosion protection for China – NEPSI

The AO2000 Series gas analyzers with Uras26, Caldos25 and Caldos27 are certified for use in potentially explosive atmospheres. The gas analyzers may be used for measurement of non-flammable gases and vapors.

**Marking**

Ex nA nC IIC T4 Gc

The AO2000 Series gas analyzers with Uras26, Caldos25 and Caldos27 are certified for use in potentially explosive atmospheres. They may be used for measurement of flammable gases and vapors.

**Marking**

Ex nA nC py IIC T4 Gc

## Explosion protection for South Korea – KCs

The AO2000 Series gas analyzers with Uras26, Caldos25 and Caldos27 are certified for use in potentially explosive atmospheres. They may be used for measurement of flammable gases and vapors.

**Marking**

Ex nA py II T4

## Version in category II 3G for measurement of flammable and non-flammable gases ('Safety Concept')

Analyzer modules for the "Safety Concept":

- Uras26 in the version with safety cell and purged sample cell windows.
- Magnos28, Caldos25 and Caldos27 in the version with direct sample chamber connection and purged analyzer module housing.

The analyzer modules are built into the 19" housing (model AO2020) or in the wall-mounted housing (model AO2040).

Monitoring of the purge gas flow rate is a feature of the 'Safety Concept'. It is fully integrated into the gas analyzer, together with the controls and signal processing.

The version complies with the Directive 2014/34/EU (ATEX directive).

There are the following explosion protection measures in the gas analyzer:

- Non-sparking assemblies and components/non-incendive components/gasketed (sparking) devices in accordance with EN 60079-15 and
- Simplified positive pressurized enclosure per EN 60079-2.

**Ex marking**

II 3G Ex nA pyb II T4 Gc

**IP rating**

IP 54

**Gas connections**

Refer to **Gas connections 'Safety concept'** on page 53.

# … Use in potentially explosive atmospheres

## … Version in category II 3G for measurement of flammable and non-flammable gases ('Safety Concept')

### Sample gas inlet conditions

| **'Safety Concept' – Sample gas inlet conditions** | |
|---|---|
| **Sample gas** | |
| Flammable and non-flammable gases and vapors are not explosive in standard operation, if they are potentially explosive in the event of a malfunction, then only rarely and for a short time (according to Zone 2). | |
| Absolute pressure | ≤ 1.1 bar |
| Oxygen content | ≤ 21 vol. % |
| Temperature class | T4 |
| **Sample gas pressure** | |
| On the sample gas inlet: | Gauge pressure $p_e$ ≤ 3 hPa |
| On the sample gas outlet: | atmospheric |
| **Sample gas flow** | Max. 40 l/h |
| **Sample gas shut off** | |
| The operator has to guarantee the disconnection of the sample gas in case of the decommissioning of the gas analyzer and in case of an alarm (failure at the pressurized enclosure) in accordance with the additional special conditions for operation with flammable sample gases. | |

If the sample gas is a mixture only of oxygen and flammable gases and vapors, it must not be explosive under any conditions. As a rule, this can be achieved by limiting the oxygen content to a maximum of 2 vol.-%.

Flammable gases and vapors that are explosive under the conditions encountered in analysis even when oxygen is excluded should be present in the mixture only in concentrations that are not critical to safety.

### Purge gas for pressurized enclosure

| **'Safety Concept' – Purge gas inlet conditions** | |
|---|---|
| Purge gas (protective inert gas) | Inert gas ($N_2$) |
| Connections | Purging gas inlet: "Analyzer Purge In",<br>Purge gas outlet: 'Analyzer Purge Out' |
| Flow rate | • During operation: 15 to 20 l/h<br>• During initial purge: 15 to 40 l/h |
| Pressure | Positive operating pressure<br>$p_e$ ≥ sample gas pressure + 0.5 hPa |
| Initial purge* | Compliance with the above purge gas flow rate is monitored in the gas analyzer.<br>• Uras26:<br>1.6 minutes at a minimum of 15 l/h;<br>• Magnos28, Caldos25, Caldos27:<br>18 minutes at a minimum of 15 l/h or<br>7 minutes at 40 l/h |
| Operation | The required overpressure of ≥ 0,5 hPa is reliably generated in the purge process compared to the sample gas via a capillary arranged in the purge gas path during the above purge gas flow. |
| Cable connectors not in use have to be closed with suitable vent plugs. | If the installation site of the gas analyzer is hazardous, An alarm is triggered if the flow rate falls below the minimum flow rate of 15 l/h (corresponding to approx. 7 hPa overpressure in the flush curtain) and if the maximum flow rate of 40 l/h (corresponding to approx. 50 hPa) is exceeded. |

* Pre-purging is not necessary if it can be proven that there is no flammable sample gas in the sample gas path or in the purging gas path.

## Gas connections ‘Safety concept’

**Uras26**

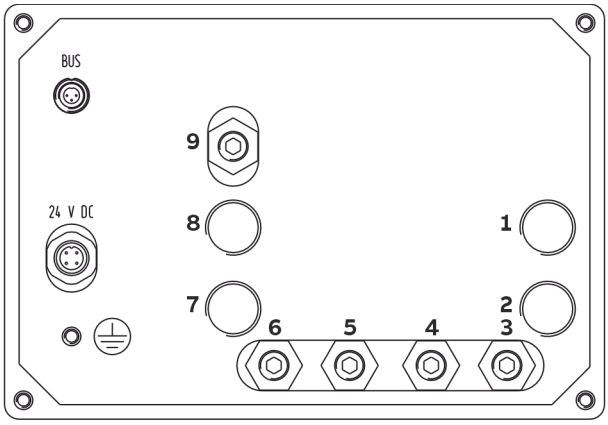


**Magnos28**

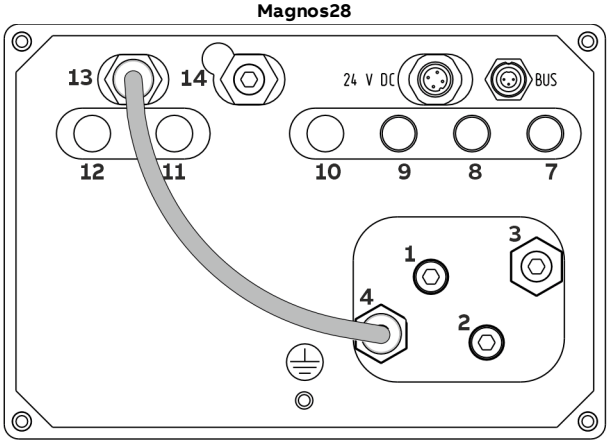


**1** Sample gas inlet gas path 1
**2** Sample gas outlet gas path 1
**3** Purge gas inlet sample cell windows ‘**Analyzer Purge In**’
**4** Purge gas inlet housing
**5** Purge gas outlet housing
**6** Purge gas outlet Flow rate monitoring ‘**Analyzer Purge Out**’
**7** Sample gas outlet gas path 2
**8** Sample gas inlet gas path 2
**9** Pressure sensor (option)

**1** Sample gas inlet
**2** Sample gas outlet
**3** Purge gas inlet analyzer housing ‘**Analyzer Purge In**’
**4** Purge gas outlet analyzer housing, piped with **13**
**7** Purge gas inlet housing
**8** Purge gas outlet housing
**9** Pressure sensor 1
**10** Pressure Sensor 2
**11** not used, sealed
**12** not used, sealed
**13** Purge gas outlet flow rate monitor, piped with **4**
**14** Purge gas outlet flow monitoring ‘**Analyzer Purge Out**’

**Figure 4: ‘Safety Concept’ gas connections Uras 26, Magnos28**

**Caldos25, Caldos27**

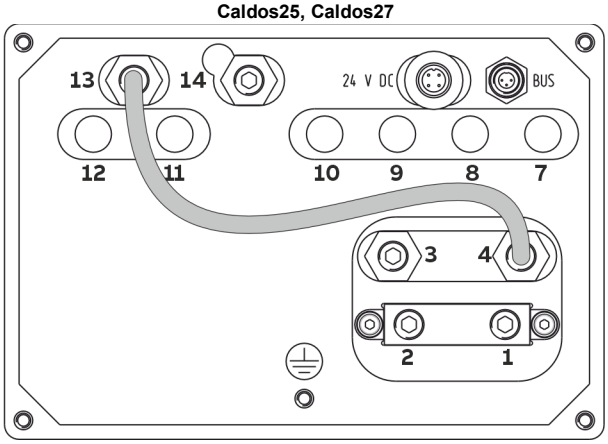


**1** Sample gas inlet
**2** Sample gas outlet
**3** Purge gas inlet analyzer housing ‘**Analyzer Purge In**’
**4** Purge gas outlet analyzer housing, piped with **13**
**7** Purge gas inlet housing
**8** Purge gas outlet housing
**9** Pressure sensor 1
**10** Pressure Sensor 2
**11** not used, sealed
**12** not used, sealed
**13** Purge gas outlet flow rate monitor, piped with **4**
**14** Purge gas outlet flow monitoring ‘**Analyzer Purge Out**’

**Figure 5: ‘Safety Concept’ gas connections Caldos25, Caldos27**

# … Use in potentially explosive atmospheres

## Version in category II 3G for measurement of non-flammable gases

The explosion-proof design in category II 3G for the measurement of non-flammable gases and vapors is a special version of the gas analyzers of the AO2000 series.
The analyzer modules Uras26, Magnos28, Magnos27, Caldos25, Caldos27 and the electrochemical oxygen sensor are suited for measuring non-flammable gases.

The analyzer modules are mounted in the central unit housing or in a separate housing (either wall-mount or 19” rack unit).

The version complies with the Directive 2014/34/EU (ATEX directive).
The gas analyzer is protected by measures in accordance with EN 60079-15 (non-sparking electric equipment, gasketed sparking devices).

In undisturbed operation, there cannot be any sparking, arcing or impermissible temperatures inside the device.

***NOTICE***

**Potential adverse effect on the IP rating**
Yellow sealing plugs (transport protection) are applied to the gas connections on the analyzer and housing to secure them during transport. The yellow sealing plugs do not guarantee a sufficient IP rating.

- Remove the yellow sealing plugs before commissioning.
- Close unused gas connections with suited sealing plugs to guarantee the IP rating.

**Ex marking**


II 3G Ex nA nC IIC T4 Gc

**Housing protection type**

IP 54

## Design AO2040 Ex-p for use in Zone 1, 21 and Zone 2, 22

The AO2040 Ex-p is an explosion proof variant from the Advance Optima AO2000 series. The AO2040 Ex-p is a stand-alone variant of the AO2000 into which one of the following analyzer modules can be installed:

- Fidas24
- Limas21
- Uras26
- Caldos25/27
- Magnos27/28
- ZO23
- O2 sensor

The device consists of the following modules:

- Analyzer module
- Pneumatic module
- Electronics module with system controller and I/O modules
- Wall housing with display and control unit and attached purge and monitoring unit.

The AO2040 Ex-p is available in the following variants:

- Equipment protection level EPL Gb for use in Zone 1
- Equipment protection level EPL Db for use in Zone 21
- Equipment protection level EPL Gc for use in Zone 2
- Equipment protection level EPL Dc for use in Zone 22

In all variants, the protection concept is based on a pressurized enclosure in accordance with EN 60079-2 and an intrinsically safe control unit in accordance with EN 60079-11.

For the Zone 1 and Zone 21 variants, the customer interfaces must be protected with an all-pole isolating relay.

**ATEX / IECEx versions**

**AO2040 Ex-p with analyzer modules Uras26, Limas21, Magnos27/28, Caldos25/27, ZO23 and electrochemical oxygen sensor**

| Design | Product code | Type examination certificate / Ex marking | Further requirements |
|---|---|---|---|
| Category “3G”, Equipment protection level “Gc” | 24041- XXX2XXXXXXXX or XXX3XXXXXXXX | **ATEX**<br>BVS 26 ATEX E 021 X<br>⟨Ex⟩ II 3G Ex pxb ib IIC T4 Gc<br>**IECEx**<br>IECEx BVS 26.0020X<br>Ex pxb ib IIC T4 Gc | — |
| Category “2G”, Equipment protection level “Gb” | 24041-XXX**1**XXXXXXXX | **ATEX**<br>BVS 26 ATEX E022 X<br>⟨Ex⟩ II 2G Ex pxb ib IIC T4 Gb<br>**IECEx**<br>IECEx BVS 26.0020X<br>Ex pxb ib IIC T4 Gb | Installation of an additional interface relay for connections on the operator’s side, if these can still remain live after the power supply has been switched off or if the pressurized encapsulation fails. |
| Category “3D”, Equipment protection level “Dc” | 24041-XXX**8**XXXXXXXX | **ATEX**<br>BVS 26 ATEX E 021 X<br>⟨Ex⟩ II 3D Ex pxb ib [ib] IIIC T130°C Dc<br>**IECEx**<br>IECEx BVS 26.0020X<br>Ex pxb ib [ib] IIIC T130°C Dc | Installation of a key switch to confirm that the interior of the housing has been cleaned of dust during commissioning. |
| Category “2D”, equipment protection level “Db” | 24041-XXX**7**XXXXXXXX | **ATEX**<br>BVS 26 ATEX E022 X<br>⟨Ex⟩ II 2D Ex pxb ib [ib] IIIC T130°C Db<br>**IECEx**<br>IECEx BVS 26.0020X<br>Ex pxb ib [ib] IIIC T130°C Db | Installation of an additional interface relay for connections on the operator’s side, if these can still remain live after the power supply has been switched off or if the pressurized encapsulation fails.<br>Installation of a key switch to confirm that the interior of the housing has been cleaned of dust during commissioning. |

# … Use in potentially explosive atmospheres

## … Design AO2040 Ex-p for use in Zone 1, 21 and Zone 2, 22

### AO2040-Fidas24 Ex

| Design | Product code | Type examination certificate / Ex marking | Further requirements |
|---|---|---|---|
| Category “3G”, Equipment protection level “Gc” | 24041- XXX2XXXXXXXX or XXX3XXXXXXXX | **ATEX**<br>BVS 20 ATEX E 049 X<br>Ex II 3G Ex pxb ib IIC T3 Gc<br><br>**IECEx**<br>IECEx BVS 20.0039X<br>Ex pxb ib IIC T3 Gc | — |
| Category “2G”, Equipment protection level “Gb” | 24041-XXX**1**XXXXXXXX | **ATEX**<br>BVS 20 ATEX E 048 X<br>Ex II 2G Ex pxb ib IIC T3 Gb<br>**IECEx**<br>IECEx BVS 20.0039X<br>Ex pxb ib IIC T3 Gb | Installation of an additional interface relay for connections on the operator’s side, if these can still remain live after the power supply has been switched off or if the pressurized encapsulation fails. |
| Category “3D”, Equipment protection level “Dc” | 24041-XXX**8**XXXXXXXX | **ATEX**<br>BVS 20 ATEX E 049 X<br>Ex II 3D Ex pxb ib [ib] IIIC T195°C Dc<br>**IECEx**<br>IECEx BVS 20.0039X<br>Ex pxb ib [ib] IIIC T195°C Dc | Installation of a key switch to confirm that the interior of the housing has been cleaned of dust during commissioning. |
| Category “2D”, equipment protection level “Db” | 24041-XXX**7**XXXXXXXX | **ATEX**<br>BVS 20 ATEX E 048 X<br>Ex II 2D Ex pxb ib [ib] IIIC T195°C Db<br>**IECEx**<br>IECEx BVS 20.0039X<br>Ex pxb ib [ib] IIIC T195°C Db | Installation of an additional interface relay for connections on the operator’s side, if these can still remain live after the power supply has been switched off or if the pressurized encapsulation fails.<br><br>Installation of a key switch to confirm that the interior of the housing has been cleaned of dust during commissioning. |

**CSA versions – only for AO2040-Fidas24 Ex**

| Design | Product code | Type examination certificate / Ex-marking | Further requirements |
|---|---|---|---|
| Class I, Zone 1<br>Equipment protection level “Gb” | 24041- XXX**6**XXXXXXXX | **CSA US/CA**<br>CSA23CA80100615X<br>Ex eb ib db mb pxb IIC T3 Gb<br>Class I, Zone 1 AEx eb ib db mb pxb IIC T3 Gb | — |
| Class I, Zone 2<br>Equipment protection level “Gc” | 24041- XXX**9**XXXXXXXX | **CSA US/CA**<br>CSA23CA80100615X<br>Ex eb ib db mb pxb IIC T3 Gc<br>Class I, Zone 2 AEx eb ib db mb pxb IIC T3 Gc | Installation of an additional interface relay for connections on the operator’s side, if these can still remain live after the power supply has been switched off or if the pressurized encapsulation fails. |
| Class II, Zone 21<br>Equipment protection level “Db” | 24041- XXX**A**XXXXXXXX | **CSA US/CA**<br>CSA23CA80100615X<br>Ex ib pxb tb IIIC T195°C Db<br>Zone 21 AEx ib pxb tb IIIC T195°C Db | Installation of a key switch to confirm that the interior of the housing has been cleaned of dust during commissioning. |
| Class II, Zone 22<br>Equipment protection level “Dc” | 24041- XXX**B**XXXXXXXX | **CSA US/CA**<br>CSA23CA80100615X<br>Ex ib pxb tb IIIC T195 °C Dc<br>Zone 22 AEx ib pxb tb IIIC T195 °C Dc | Installation of an additional interface relay for connections on the operator’s side, if these can still remain live after the power supply has been switched off or if the pressurized encapsulation fails.<br><br>Installation of a key switch to confirm that the interior of the housing has been cleaned of dust during commissioning. |

**Note**
If no further distinction needs to be made between ATEX, IECEx and CSA, the special requirements are subsequently referred to as Equipment Protection Level (EPL) Gc, Gb or Dc, Db.
These are then valid for the various explosion protection approvals.

# … Use in potentially explosive atmospheres

## … Design AO2040 Ex-p for use in Zone 1, 21 and Zone 2, 22

### Technical specifications – Uras26, Limas21, Magnos27/28, Caldos25/27

**Sample gas**

The analyzer modules Uras26, Limas21, Magnos27/28, Caldos25/27 may be used for measuring flammable gases if the following specifications are met:

- The sample gas that is fed in must not be potentially explosive.
- The supplied sample gas may only contain flammable gases with an UEL < 80% and an oxygen content < 2 vol.–%.
- Nitrogen ($N_2$) must be used with flammable gases as a purge gas.
- The specifications must also be adhered to during the start-up and shut-down processes, and the pressure, temperature and gas matrix must be taken into account.
- The relevant safety regulations for working with combustion gases must be complied with.

**Note**




An explosive mixture of gases is defined as a mixture containing combustion components, that falls within the lower (UEG) and upper explosion limits (OEG), which is accompanied by the simultaneous presence of oxidizers (e.g. air, oxygen).

- Gas mixtures with combustion gas components that exceed the respective gas-specific lower explosion limits (UEG) may only be fed into the gas analyzer if it has been ascertained that the gas mixture is non-explosive.
  - This can be achieved by excluding the presence of atmospheric oxygen and/or other oxidizers.
  - The supplied sample gas may only contain flammable gases with an UEL < 80% and an oxygen content < 2 vol.–%.
- If the operator is unable to guarantee this, or if he is not sure about the composition of the gas mixture, the sample gas mixture may not be fed into the analyzer.

### Technical specifications – Fidas24

**Sample gas**

The Fidas24 analyzer module may only be used for the measurement of combustion gases, provided that the following conditions are adhered to:

- The sample gas that is fed in must not be potentially explosive.
- The sample gas that is fed in must at no time, exceed the C1-equivalent of 8 Vol-% $CH_4$.
- The specifications must also be adhered to during the start-up and shut-down processes, and the pressure, temperature and gas matrix must be taken into account.
- The relevant safety regulations for working with combustion gases must be complied with.

**Note**

8 Vol.-% $CH_4$ or C1-equivalents exceed the lower explosion limit (UEG).




An explosive mixture of gases is defined as a mixture containing combustion components, that falls within the lower (UEG) and upper explosion limits (OEG), which is accompanied by the simultaneous presence of oxidizers (e.g. air, oxygen).

- Gas mixtures with combustion gas components that exceed the respective gas-specific lower explosion limits (UEG) may only be fed into the gas analyzer if it has been ascertained that the gas mixture is non-explosive.
  - This can be achieved by excluding the presence of atmospheric oxygen and/or other oxidizers.
- If the operator is unable to guarantee this, or if he is not sure about the composition of the gas mixture, the sample gas mixture may not be fed into the analyzer.

### Combustion gas and combustion air

- The maximum pressures of combustion gas and combustion air may not be exceeded, refer to **Special characteristics of the Fidas24 in the AO2040 Ex-P** on page 63.
- The operator must take appropriate measures to ensure that the pressure of the combustion gas does not exceed 6 bars (abs), even in the case of a fault.
- The maximum flow of combustion gas must not be exceeded, refer to **Combustion gas parameter** on page 64.
- The relevant safety regulations for working with combustion gases must be complied with.

### Instrument air and purge gas (inert gas)

- If the inert gas and instrument air supply are connected to a single source, the quality requirements for the instrument air must be adhered to, refer to **Properties of the instrument air** on page 64.
- If the inert gas supply is separate from the instrument air supply, the (lower) quality requirements specified in the operating manual for the purging and monitoring unit FS870S must be adhered to for the inert gas.

## Special characteristics of the Uras26 in the AO2040 Ex-P

### Sample gas inlet conditions

**Note**

Maximum permissible absolute pressure at the sample gas inlet according to explosion protection approval: 1600 hPa

- The metrological data were only verified up to an absolute pressure of 1250 hPa.
- This variant is only available with internal gas lines made of stainless steel or direct connection to a measuring chamber.

### Flammable gases

- When measuring flammable sample gases, the sample gas conditions in chapter **Technical specifications – Uras26, Limas21, Magnos27/28, Caldos25/27** on page 58 must also be observed.
- The pressure sensor must not be connected to the sample gas path during measurement of flammable sample gases.

### Corrosive gases

Highly corrosive associated gas components, e.g. chlorine ($Cl_2$) and hydrogen chloride (e.g. HCl), as well as gases or aerosols containing chlorine must be cooled or undergo prior absorption.

### Requirements for the sample gas outlet

**Note**

Maximum permissible absolute pressure at the sample gas outlet according to explosion protection approval: < 1600 hPa

- The metrological data were only verified up to an absolute pressure of 1250 hPa.
- This variant is only available with internal gas lines made of stainless steel or direct connection to a measuring chamber.

# … Use in potentially explosive atmospheres

## … Design AO2040 Ex-p for use in Zone 1, 21 and Zone 2, 22

### Special characteristics of the Limas21UV in the AO2040 Ex-P

#### Sample gas inlet conditions

**Note**

Maximum permissible absolute pressure at the sample gas inlet according to explosion protection approval: 1600 hPa

- The metrological data were only verified up to an absolute pressure of 1250 hPa.
- This variant is only available with internal gas lines made of stainless steel or direct connection to a measuring chamber.

#### Requirements for the sample gas outlet

**Note**

Maximum permissible absolute pressure at the sample gas outlet according to explosion protection approval: < 1600 hPa

- The metrological data were only verified up to an absolute pressure of 1250 hPa.
- This variant is only available with internal gas lines made of stainless steel or direct connection to a measuring chamber.

#### Flammable and corrosive gases

Depending on which sample cell has been installed in the analyzer module, the following application restrictions and notes must be observed:

| | **Standard cell** | **Quartz cell** |
|---|---|---|
| **Application** | Standard applications | Corrosive gases |
| **Wavelength range** | 200 to 600 nm | 200 to 600 nm |
| **Resistance**[1)] | | |
| Suitable for measurement of … | Non-corrosive gases | corrosive gases, e.g. wet $Cl_2$, wet HCl, $H_2SO_4$, $SO_3$, ozone |
| Not suitable for measurement of … | Highly corrosive gases, e.g. gases containing chlorine, $H_2SO_4$, $SO_3$, fluorine compounds | Fluorine compounds |
| **Safety principle** | | |
| Corrosive gases | PTFE gas pipes | — |
| Flammable gases | Stainless steel gas pipes.<br>When measuring flammable sample gases, the sample gas conditions described in chapter **Technical specifications – Uras26, Limas21, Magnos27/28, Caldos25/27** on page 58 must also be observed. | When measuring flammable sample gases, the sample gas conditions described in chapter **Technical specifications – Uras26, Limas21, Magnos27/28, Caldos25/27** on page 58 must also be observed. |
| **Leak tightness** | < $1 \times 10^{-3}$ hPa l/s | < $1 \times 10^{-6}$ hPa l/s |
| **Sample cell material** | | |
| Cell tube | Aluminum | Silica glass ($SiO_2$) |
| Window | $CaF_2$, adhesive fastening | Silica glass |
| Seal | — | FFKM75 |
| Connectors | Stainless steel 1.4571 | PFA |
| **Gas line materials** | FPM or PTFE | PFA |
| **Gas connector materials** | Stainless steel 1.4571 | PFA |
| **Sample gas connection design** | Connectors with ⅛ NPT female threads | Pipes 6/4 mm |
| | For connection drawing, see **Limas21 UV gas connections** on page 78. | |

1) See also **Sample gas inlet conditions** on page 12.

### Special characteristics of the Magnos27 in the AO2040 Ex-P

#### Sample gas inlet conditions

**Note**

Maximum permissible absolute pressure at the sample gas inlet according to explosion protection approval: 1600 hPa

- The metrological data were only verified up to an absolute pressure of 1250 hPa.
- This variant is only available with internal gas lines made of stainless steel or direct connection to a measuring chamber.

#### Flammable gases

- When measuring flammable sample gases, the sample gas conditions in chapter **Technical specifications – Uras26, Limas21, Magnos27/28, Caldos25/27** on page 58 must also be observed.
- The pressure sensor must not be connected to the sample gas path during measurement of flammable sample gases.

#### Requirements for the sample gas outlet

**Note**

Maximum permissible absolute pressure at the sample gas outlet according to explosion protection approval: < 1600 hPa

- The metrological data were only verified up to an absolute pressure of 1250 hPa.
- This variant is only available with internal gas lines made of stainless steel or direct connection to a measuring chamber.

### Special characteristics of the Magnos28 in the AO2040 Ex-P

#### Sample gas inlet conditions

**Note**

Maximum permissible absolute pressure at the sample gas inlet according to explosion protection approval: 1600 hPa

- The metrological data were only verified up to an absolute pressure of 1250 hPa.
- This variant is only available with internal gas lines made of stainless steel or direct connection to a measuring chamber.

#### Flammable gases

- When measuring flammable sample gases, the sample gas conditions in chapter **Technical specifications – Uras26, Limas21, Magnos27/28, Caldos25/27** on page 58 must also be observed.
- The pressure sensor must not be connected to the sample gas path during measurement of flammable sample gases.

#### Requirements for the sample gas outlet

**Note**

Maximum permissible absolute pressure at the sample gas outlet according to explosion protection approval: < 1600 hPa

- The metrological data were only verified up to an absolute pressure of 1250 hPa.
- This variant is only available with internal gas lines made of stainless steel or direct connection to a measuring chamber.

# … Use in potentially explosive atmospheres

## … Design AO2040 Ex-p for use in Zone 1, 21 and Zone 2, 22

### Special characteristics of the Caldos25 in the AO2040 Ex-P

#### Sample gas inlet conditions

**Note**

Maximum permissible absolute pressure at the sample gas inlet according to explosion protection approval: 1600 hPa

- The metrological data were only verified up to an absolute pressure of 1250 hPa.
- This variant is only available with internal gas lines made of stainless steel or direct connection to a measuring chamber.

#### Flammable gases

When measuring flammable sample gases, the sample gas conditions described in chapter **Technical specifications – Uras26, Limas21, Magnos27/28, Caldos25/27** on page 58 must also be observed.

#### Requirements for the sample gas outlet

**Note**

Maximum permissible absolute pressure at the sample gas outlet according to explosion protection approval: < 1600 hPa

- The metrological data were only verified up to an absolute pressure of 1250 hPa.
- This variant is only available with internal gas lines made of stainless steel or direct connection to a measuring chamber.

### Special characteristics of the Caldos27 in the AO2040 Ex-P

#### Sample gas inlet conditions

**Note**

Maximum permissible absolute pressure at the sample gas inlet according to explosion protection approval: 1600 hPa

- The metrological data were only verified up to an absolute pressure of 1250 hPa.
- This variant is only available with internal gas lines made of stainless steel or direct connection to a measuring chamber.

#### Flammable gases

- When measuring flammable sample gases, the sample gas conditions in chapter **Technical specifications – Uras26, Limas21, Magnos27/28, Caldos25/27** on page 58 must also be observed.
- The pressure sensor must not be connected to the sample gas path during measurement of flammable sample gases.

#### Requirements for the sample gas outlet

**Note**

Maximum permissible absolute pressure at the sample gas outlet according to explosion protection approval: < 1600 hPa

- The metrological data were only verified up to an absolute pressure of 1250 hPa.
- This variant is only available with internal gas lines made of stainless steel or direct connection to a measuring chamber.

### Special characteristics of the ZO23 in the AO2040 Ex-P

#### Sample gas inlet conditions

| ZO23 – sample gas input conditions | |
|---|---|
| **Temperature** | 5 to 50 °C |
| **Inlet pressure $p_{abs.}$** | ≤ 1070 hPa |
| **Flow rate** | 4 to 20 l/h |

- The sample gas flow rate must be kept constant within the specified range at ±0.2 l/h.
- The sample gas must be taken unpressurized from a bypass.
- If the sample gas flow is too low, contamination effects from the gas lines (leaks, permeability, de-sorption) will lead to inaccuracies in the measurement result.
- If the sample gas flow is too high, asymmetrical cooling of the sensor may cause measurement errors. This can also cause quicker aging or damage to the measuring cell.

**Note**
The temperature, pressure and flow of the sample gas must be kept constant, to such an extent that the influence of variations on the measuring accuracy is acceptable, refer to **Technical specifications – Uras26, Limas21, Magnos27/28, Caldos25/27** on page 58.

#### Flammable gases
The sum of concentrations of flammable gases in the sample gas must not exceed 100 ppm.

#### Requirements for the sample gas outlet
**Note**
Maximum permissible absolute pressure at the sample gas outlet according to explosion protection approval:
< 1070 hPa

#### Purge gas
Use only air as the purge gas (no nitrogen), as ambient air serves as the reference gas.

### Special characteristics of the Fidas24 in the AO2040 Ex-P

#### Sample gas inlet conditions

| Parameter | Value/Description |
|---|---|
| Temperature | ≤ 130 °C<br>(also applies in the case of heated sample gas lines) |
| Inlet pressure $p_{abs}$ | 800 to 1100 hPa |
| Outlet pressure | The outlet pressure must be the same as the atmospheric pressure.<br>Overpressure version: maximum 1250 hPa abs |
| Flow rate | Approx. 80 to 100 l/h<br>at atmospheric pressure (1000 hPa) |
| Humidity | ≤ 40 % $H_2O$ |

**Note**
The temperature, pressure and flow of the sample gas must be kept constant, to such an extent that the influence of variations on the measuring accuracy is acceptable, refer to **Stability** on page 40.

#### Flammable sample gases

**⚠ DANGER**

**Explosion hazard**
Explosion hazards due to flammable sample gases with a C1-equivalent of ≥ 8 Vol-% $CH_4$.
- The flammable sample gas that is fed in must have the following specifications:

#### Sample gas specifications
- The sample gas that is fed in must at no time, exceed the C1-equivalent of 8 Vol-% $CH_4$.
- The sample gas that is fed in must not be potentially explosive.
- The specifications must also be adhered to during the start-up and shut-down processes, and the pressure, temperature and gas matrix must be taken into account.

**Note**




An explosive mixture of gases is defined as a mixture containing combustion components, that falls within the lower (UEG) and upper explosion limits (OEG), which is accompanied by the simultaneous presence of oxidizers (e.g. air, oxygen).

# … Use in potentially explosive atmospheres

## … Design AO2040 Ex-p for use in Zone 1, 21 and Zone 2, 22

### Properties of the instrument air

| Parameter | Value/Description |
|---|---|
| Quality | According to ISO 8573-1 Class 2<br>Particle size: max. 1 µm<br>Particle density: max. 1 mg/m$^{3}$$^{3}$<br>Oil content: max. 0.1 mg/m$^{3}$$^{3}$<br>Dew point: At least 10 °C below the lowest expected ambient temperature |
| Inlet pressure $p_e$ | 4000 hPa, ±500 hPa;<br>5000 hPa, ±500 hPa for Overpressure version |
| Temperature | Maximum 40 °C |
| Flow rate | Typically approx. 1200 l/h, refer also to **Purging gas properties for pressurized enclosure (FS870S)** on page 64. |

**Note**

- For Fidas24 in the overpressure version, the purge gas supply for the pressurized enclosure must be made separately from the instrument air supply. See **Compressed air as purging gas** on page 64.
- In the case of common supply, the pressure for the purge gas supply must be reduced using an additional pressure reducer.

### Combustion gas

| Combustion gas parameter | |
|---|---|
| Quality | Hydrogen ($H_2$), Quality 5.0 |
| Inlet pressure $p_e$ | 1200 hPa, ±100 hPa |
| Combustion gas flow rate* | Typical ≤ 3 l/h, maximum 10 l/h |

* The combustion gas flow is limited to a maximum of 10 l/h $H_2$ by an integrated flow limiter.

**Note**

The safety valve installed in the analyzer closes safely up to a combustion gas pressure of 6 bar.
The operator must take suitable measures to prevent the occurrence of higher pressures at the combustion gas inlet.

### Purging gas properties for pressurized enclosure (FS870S)

#### Compressed air as purging gas

Compressed air may only be used as a purging gas with non-flammable sample gases and with a separate purging gas supply for the Fidas24.

| Parameter | Value/Description |
|---|---|
| Medium | Compressed air |
| Quality | Class 533, in accordance with DIN ISO 8573-1 |
| Inlet pressure $p_e$ | 4000 hPa, ±500 hPa |
| Temperature | Maximum 40 °C |
| Flow rate | See **Purging parameters of the purging and monitoring unit FS870S** on page 65. |

**Note**

When using the instrument air of the Fidas24 as purging gas for the pressurized enclosure, the quality specified in the **Properties of the instrument air** on page 64 table applies.

#### Nitrogen as purging gas

Nitrogen must be used for all analyzer modules except Fidas24 when measuring flammable gases.

| Parameter | Value/Description |
|---|---|
| Medium | Nitrogen $N_2$ |
| Quality | The inert gas must not, through its chemical properties or the impurities it contains, impair the effectiveness of the ignition protection type “Ex p” nor adversely affect the proper operation and integrity of the components contained in the housing. |
| Inlet pressure $p_e$ | 4000 hPa, ±500 hPa |
| Temperature | Maximum 40 °C |
| Flow rate | See **Purging parameters of the purging and monitoring unit FS870S** on page 65. |

### Purge gas flow

**Note regarding the purging air supply**

Long supply lines with small diameters can result in incorrect functioning of the pressurized control of the purging and monitoring unit FS870S.

The following points should be observed when configuring the purging air supply:

- The chosen pressure reducer must be able to supply not only the working pressure but also the corresponding volume flow of 4,000 l/h
- Long supply lines should be avoided in general, and the inner diameter of the supply lines should be at least 6 mm, or for longer lengths, even larger.
- Keep the distance between the pressure reducer of the purging air supply and the gas analyzer as short as possible.

### Purging parameters of the purging and monitoring unit FS870S

**Initial purging parameters**

| | All analyzer modules | Fidas24 |
|---|---|---|
| Min. initial purging volume | 195 l | 250 l |
| Min. through-flow for initial purging | 0.8 l/s = 2880 l/h | 0.3 l/s = 1080 l/h |
| Nominal flow rate for initial purging | 1 l/s = 3600 l/h | 1 l/s = 3600 l/h |
| Pre-adjusted working pressure | 4 hPa | 4 hPa |

**Operating parameters**

| | All analyzer modules | Fidas24 |
|---|---|---|
| Purge gas | Air/nitrogen* | Air |
| Operating mode | Compensation for leakage losses | Continuous flushing |
| Min. flow during operation | — | 0.3 l/s = 1080 l/h |
| Nominal flow during operation | — | 0.5 l/s = 1800 l/h |
| Nominal pressure during operation | 4 hPa | 2 hPa |
| Lower shut-off pressure during operation | 1 hPa | 0.8 hPa |
| Upper shut-off pressure during operation | 35 hPa | 15 hPa |
| Signal pressure during operation | < 1.5 hPa | < 1.5 hPa |

* Nitrogen must be used as a purge gas when dealing with flammable gases.

# General data

## Operation

**LCD display**

Backlit graphics display, 320 x 240-pixel resolution

**Measured value display**

Digits with unit and bargraph; simultaneous display of up to 6 measured values, configurable

**Units of measure**

Selectable in physical units, e.g. ppm, vol.-%, mg/m$^3$ or g/m$^3$, as well as in % of span or mA

**Digital value resolution**

Better than 0.2 % of span

**Status display**

- Green LED: Power supply switched on
- Yellow LED: Maintenance required
- Red LED: Failure

**Status messages**

Plain text

**Use**

Panel with six soft keys, two cancel keys and 10-digit keypad; menu-driven interface, various languages available

**Measuring range switchover and feedback**

There are three ways of executing the measuring range switch-over:

- Manually on the gas analyzer
- Automatically ('autorange') by means of appropriate configured switch-over thresholds
- Externally controlled via appropriately configured digital inputs

The measuring range feedback can be implemented via appropriately configured digital outputs; it is independent of the se- lected type of measuring range switch-over.

**Limit value monitoring**

Limit values can be set during the gas analyzer configuration. The limit value signals (alarms) are output via digital outputs.

## Housing

**Versions**

19" housing (model AO2020) or
wall-mount housing (model AO2040)

**Housing materials**

- Housing: Stainless steel 1.4016
- Module back panel: Aluminum
- Keyboard foil: Polyester

**Housing color**

Light gray (RAL 7035), basalt gray (RAL 7012)

**Weight**

Analyzer unit with one analyzer module:
18 to 23 kg

**Dimensions**

Refer to **Dimensions** on page 88.

**IP rating**

The IP rating of the housing depends on the housing design and the analyzer modules installed.

| Version / analyzer module | IP20 | IP40 | IP54 | IP65 |
|---|---|---|---|---|
| Without connection box | X | | | |
| Version for emission measurement | | X | | |
| With connection box and Limas21 HW, Magnos27, Fidas24*, ZO32 | | | X* | |
| With connection box and Uras26, Limas21, Magnos28, Caldos25, Caldos27 | | | | X |
| Version that can be purged (option) | | | X | X |
| AO2040 Ex-p | | | | X |
| AO2040 Ex-p with Magnos27 or ZO23 | | | X | |

* IP rating IP54 not for the pressure equalization opening of the Fidas24, see **Gas and electric connections Fidas24 and Fidas24 NMHC** on page 86.

**Note**

For combinations of analyzer modules, the lower IP rating applies.
Example:
When combining Uras26 (IP65) with Magnos27 (IP54), the resulting IP rating is then **IP54**.

## Housing purge

Housing purge is possible with the IP 54 version with connection box.
The version can be fitted with screwed cable glands (in accordance with EN) or with conduit connections (in accordance with CSA).

Purge gas flow during operation max. 20 l/h (Fidas24, Fidas24 NMHC: approx. 300 l/h), purge gas pressure $p_e$ = 2 to 4 hPa.
The purge gas should not contain any sample gas components.

## Pressure sensor

**Use**

| Analyzer module | Pressure sensor |
|---|---|
| Uras26, Limas21 UV, Limas21 HW, Caldos27 | Factory-installed as standard |
| Magnos28, Magnos27 | Factory-installed as an option |
| Caldos25, Fidas24, ZO23 | Not required |

**Working range**

$p_{abs}$ = 600 to 1250 hPa

**Materials**

Silicone gel, plastics, FPM (Fluorocarbon rubber)

**Sample gas composition**

The pressure sensor must not be connected to the sample gas path when the sample gas is corrosive, flammable or explosive.

## Gas connections

**Layout**

Gas ports on back (19” rack housing) or bottom (wall-mount housing) of the analyzer module.

**Version**

⅛ NPT female threads for commercially available adapters, e.g. Swagelok®, unless other versions are specified in the specification of the individual analyzer modules.
Refer to **Gas connections** on page 77.

**Note**

With the IP54 version of the Fidas24, the operator must ensure the IP protection class of the housing by taking additional design measures at the pressure equalization opening.

# … General data

## Electrical connections

### Central unit

- Power supply:
  3-pin grounded-instrument connector according to EN 60320/C14, connection cable supplied
- Ethernet: two 8-pin RJ45 female connectors
- System bus (3-pin female connector)

### Analyzer modules

- Power supply: 4-pin male connector
- Heating of detector and sample gas inlet (Fidas analyzer modules): 4-pin male connector, connection cable included in delivery
- System bus (3-pin female connector)

### AO2040-Fidas24 Ex

The power supply cable is connected to the corresponding terminals of the purging and monitoring unit, refer to **Purging and monitoring unit FS870S** on page 76.

### Power supply

#### Power supply unit

The power supply is used to supply 24 V DC to the integrated analyzers and the associated electronics.

| | |
|---|---|
| Input voltage | 100 to 240 V AC, −15 %, +10 % |
| Input Current | 2.2 A max |
| Line Frequency Range | 50 to 60 Hz, ±3 Hz |
| Power consumption | Maximum 187 VA |
| Output Voltage | 24 V DC, ±3 % |
| Connection | 3-pin grounded-instrument connector to EN 60320/C14, connection cable in scope of supply |

#### Power consumption of the analyzer modules

| Module | Power consumption |
|---|---|
| System Controller | approx. 15 W. |
| I/O modules | each approx. 10 W |
| Caldos25 | Max. 25 W |
| Caldos27 | Max. 17 W |
| Fidas24 | Max. 40 W |
| Fidas24 NMHC | max. 40 W |
| Limas21 UV | max. 100 W |
| Limas21 HW | max. 100 W |
| LS25 | Max. 20 W |
| Magnos28 | Max. 50 W |
| Magnos27 | Max. 35 W |
| Pneumatic Module | Approx. 20 W |
| Uras26 | Max. 95 W |
| ZO23 | approx. 12/35 W in continuous/starting operation |

#### Fidas24: Heating of detector and sample gas inlet

| | |
|---|---|
| Input voltage | 115/230 V AC, ± 15 % (max. 250 V AC) |
| Line Frequency Range | 50/60 Hz, ±3 Hz |
| Power consumption | 125 VA for Fidas24 detector,<br>approx. 200 VA for Fidas24 NMHC detector,<br>125 VA for sample gas inlet (option) |
| Connection | 4-pin male connector, connection cable included in scope of supply |

## Safety

In accordance with EN 61010-1

**Protection class**

- System housing: Protection class I
- Analyzer module: Protection class III

**Overvoltage category**

II

**Pollution degree**

2

**Safe isolation**

The power supply is electrically isolated from other circuits by means of reinforced or double insulation. Protective Extra Low Voltage (PELV) on low-voltage side.

## Electromagnetic compatibility

In accordance with EN 61326-1

**Noise immunity**

Inspection level: industrial area, fulfills at least the evaluation criteria according to Table 2 of EN 61326-1.

**Emitted interference**

Limit values class B for electromagnetic radiation disturbance and conducted disturbance are met.

**Emitted interference AO2040-Fidas24 Ex**

Limit value class A for interference field strength and interference voltage is met.

## Mechanical stress

**Transport**

Vibration test per EN 60068-2-6:1996.
Shock test per EN 60068-2-27:1995.
In its original packaging, the gas analyzer withstands normal shipping conditions.

## Requirements for the installation site

**Installation location**

The gas analyzer is intended for indoor installation only. The specification of the gas analyzer is applicable up to an altitude of 2000 m above sea level. Altitude above 2000 m on request.

The installation site must be stable enough to bear the weight of the gas analyzer!
For safe installation and disassembly, we recommend supporting the 19″ housing in the cabinet or rack with slide rails!

**Vibrations/shocks**

- If the gas analyzer is installed in a cabinet, the maximum acceleration amplitude may not exceed 0.01 $ms^{-2}$ in a frequency range of 0.1 to 200 Hz.
- If the gas analyzer is not installed in a cabinet, the following data for the individual analyzer modules apply.

| Analyzer module | Vibration |
|---|---|
| Uras26 | max. ±0.04 mm at 5 to 55 Hz, 0.5 g at 55 to 150 Hz, slight transient effect on measured value in the area of the beam modulation frequency |
| Limas21 UV | max. ±0.04 mm at 5 to 55 Hz, 0.5 g at 55 to 150 Hz |
| Limas21 HW | max. ±0.04 mm/0.5 g at 5 to 150 Hz |
| Magnos28 | max. ±0.04 mm at 5 to 20 Hz |
| Magnos27 | max. ±0.04 mm at 5 to 60 Hz |
| ZO23 | max. ±0.04 mm at 5 to 55 Hz, 0.5 g at 55 to 150 Hz |
| Caldos25 | max. ±0.04 mm at 5 to 30 Hz |
| Caldos27 | max. ±0.04 mm at 5 to 55 Hz, 0.5 g at 55 to 150 Hz |
| Fidas24 | Max. 0.5 g, max. 150 Hz |
| Fidas24 NMHC | Max. 0.5 g, max. 150 Hz |
| LS25 | Max. ±0.6 mm around the optical axis, max. 500 Hz |

**Note**

For compliance with the metrological data, a vibration damped/decoupled installation of the gas analyzer may be necessary in accordance with the vibration effects at the installation site.

# … General data

## … Requirements for the installation site

### Ambient temperature

| Analyzer module | During operation when installed in housing | |
|---|---|---|
| | without central unit | with central unit |
| Uras26 | +5 to +45 °C | +5 to +40 °C |
| Limas21 UV | +5 to +45 °C | +5 to +40/45 °C with/without I/O cards |
| Limas21 HW | +15 to +35 °C | +15 to +35 °C |
| Magnos28 | +5 to +50 °C | +5 to +45 °C |
| Magnos27 | +5 to +45 °C, +5 to +50 °C* | +5 to +45 °C |
| ZO23 | +5 to +45 °C | +5 to +45 °C |
| Caldos25 | +5 to +45 °C | +5 to +45 °C |
| Caldos27 | +5 to +50 °C | +5 to +45 °C |
| Fidas24 | +5 to +45 °C | +5 to +45 °C |
| Fidas24 NMHC | +5 to +40 °C | +5 to +40 °C |
| LS25 | −20 to +55 °C, no direct solar radiation | |
| Oxygen sensor | +5 to+ 40 °C in 19-inch housing, +5 to +35 °C in wall-mount housing | |
| Central unit without analyzer module | +5 to +55 °C | |

* With direct sample cell connection and when installed in housing without Uras26

### Relative humidity

Maximum 75 %, no condensation

### Climate class

- 3K3 for housing protection IP 20 (condensation not permitted)
- 3K4 for housing protection IP 54 (condensation permitted) in accordance with EN 60721-3-3: 1995

### Air circulation

For sufficient air circulation, multiple housings in a 19” rack must be installed with a separation of at least 1 HU between housings.

# Electrical connections

## Measured value and signal processing

Processor system with buffered real-time clock and non-volatile memory for firmware and device data.
Software updates can be obtained via the Ethernet interface.

## I/O modules

**Number of Slots**

5 slots (see **Terminal assignment** on page 71)

**Specification**

Refer to **Figure 6**.

**Notes regarding conductor cross-section**

- The maximum capacity of terminals for stranded or solid conductors is 1 $mm^2$ (17 AWG).
- The stranded conductor may be tinned on the tip or twisted for simplified connection.
- When using wire end ferrules the total section must not exceed 1 $mm^2$, i.e. the maximum stranded conductor section cannot be greater than 0.5 $mm^2$. The Weidmüller PZ 6/5 crimping tool must be used for crimping the ferrules.

## Interfaces

**Ethernet**

To connect the gas analyzer to Ethernet networks. TCP/IP protocol and Modbus TCP/IP protocol via 10/100/1000BASE-T interface.
Electrical connection: Two 8-pin RJ45 plugs

**System bus**

Internal bus for communication between the gas analyzer's functional units.
Electrical connection: 3-pin female connector

## Power supply

**Input voltage**

24 V DC, ±3 % from the power supply built in the system housing (see **Power supply unit** on page 68)

**Power**

approx. 15 W without I/O modules

## Terminal assignment

**Electronics module**

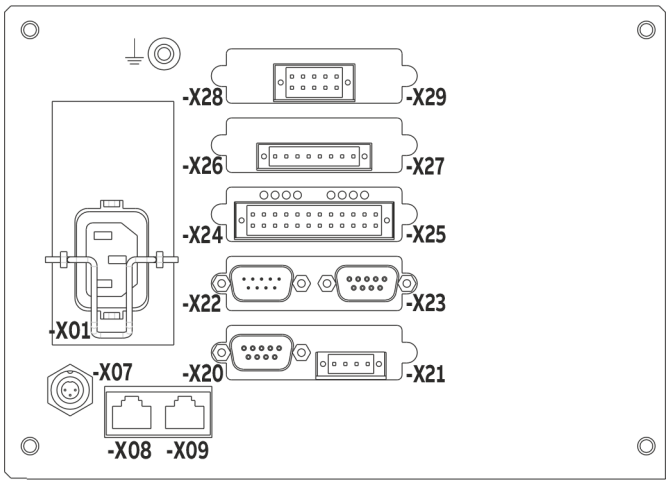


**Figure 6: Terminal assignment of electronic module (example)**

| Connection | Description |
|---|---|
| **-X01** | Power supply<br>(refer to page 68) |
| **-X07** | System bus<br>(refer to page 5) |
| **-X08, -X09** | Ethernet 10/100/1000BASE-T interfaces |
| **-X20 to -X29** | I/O modules (5 slots), options:<br>• Profibus-module<br>(refer to page 72)<br>• Modbus-module<br>(refer to page 72)<br>• Analog output module (2 or 4-channel)<br>(refer to page 75)<br>• Analog output module<br>(refer to page 75)<br>• Digital-I/O-module<br>(refer to page 73) |
| ⏚ | Connection for potential equalization |

# … Electrical connections

## … Terminal assignment

### PROFIBUS®-Module

#### Application

Integration of the gas analyzer into PROFIBUS PA and PROFIBUS DP networks for transfer of measured values and status signals as well as analog input, digital input and digital output signals.
Digital data transmission certified in accordance with the VDI 4201 guideline, Sheet 1 and Sheet 2.

#### Electrical connections

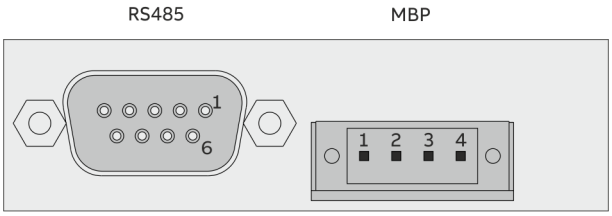


**Image 7: PROFIBUS® module**

#### RS485 interface

Version: 9-pin sub-D female connector

| Pin | Signal | Description |
|---|---|---|
| 1 | — | not assigned |
| 2 | M24 | 24 V output voltage, ground |
| 3 | RxD/TxD-P | Receive/transmit data plus, B-line |
| 4 | — | not assigned |
| 5 | DGND | Data transmission potential (Reference potential for VP) |
| 6 | VP | Supply voltage plus (5 V) |
| 7 | P24 | 24 V output voltage plus, max. 0.2 A |
| 8 | RxD/TxD-N | Receive/transmit data N, A-line |
| 9 | — | not assigned |

#### MBP Interface (not intrinsically safe)

Model: 4-pole plug-in terminal strip with mating connector (included in the scope of delivery).

| Pin | Signal |
|---|---|
| 1 | + |
| 2 | Shield |
| 3 | – |
| 4 | not used |

### Modbus®-Module

#### Application

Transmission of measured values and status signals as well as analog input, digital input and digital output signals to higher-level systems, e.g. to Windows standard applications via an M-DDE server.

Modbus slave protocol in RTU (Remote Terminal Unit) mode either via the RS232 or the RS485 interface (configurable).

#### Electrical connections

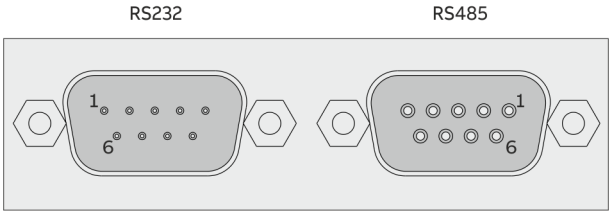


**Figure 8: Modbus module**

#### RS232 Interface

Version: 9-pin sub-D male connector

| Pin | Signal |
|---|---|
| 2 | RxD |
| 3 | TxD |
| 5 | GND |

#### RS485 interface

Version: 9-pin sub-D female connector

| Pin | Signal |
|---|---|
| 2 | RTxD- |
| 3 | RTxD+ |
| 5 | GND |

## Digital I/O module

### Electrical connections

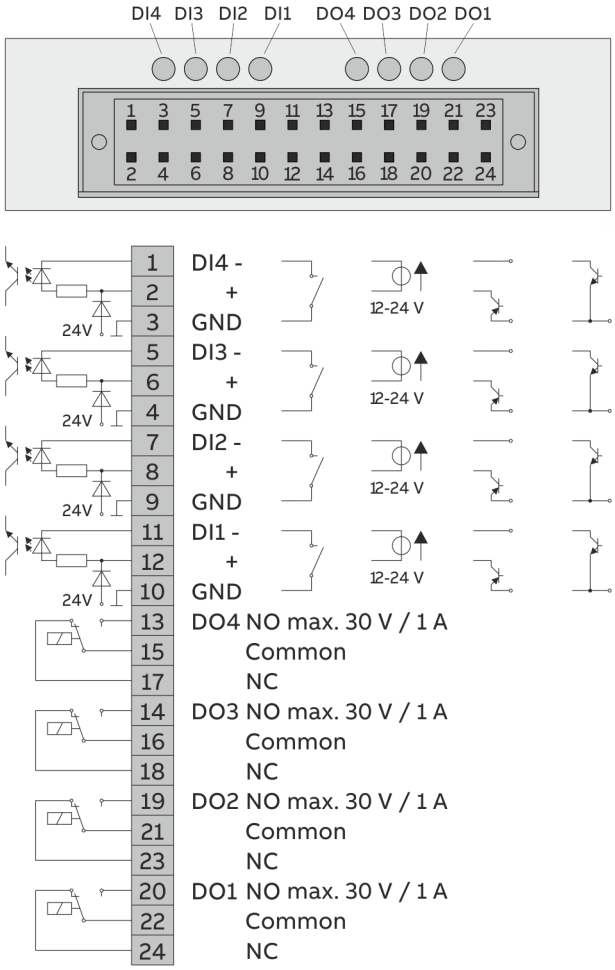


**Figure 9: Electrical connections, digital I/O module**

**Digital inputs DI1 to DI4**

Optocouplers with internal 24 V DC power supply. Control system alternatively available with potential-free contacts, with external voltage 12 to 24 V DC or with PNP or NPN open-collector driver.

**Digital outputs DO1 to DO4**

Potential-free changeover contacts, maximum contact load capacity 30 V/1 A.

Relays must at all times be operated within the specified data range.

Inductive or capacitive loads are to be connected with suitable protective measures (self-induction recuperation diodes for inductive loads and series resistors for capacitive loads).

Relays are shown in the unpowered state.

The unpowered state corresponds to the state in the event of a fault ("fail safe").

**Version**

2 × 12-pole plug-in terminal strip with mating connector (included in the scope of delivery).

# … Electrical connections

## … Terminal assignment

### Terminal assignment for the standard function block applications

| | | |
|---|---|---|
| **Status signals, externally controlled calibration:** | | |
| | **Individual status signal:** | **Sum status signals:** |
| DO1 | Failure | Overall status |
| DO2 | Function Check | Limitation |
| DO3 | Maintenance Required | Limitation |
| DO4 | External solenoid valve | External solenoid valve |
| DI1 | Start auto-calibration | Start auto-calibration |
| DI2 | Disable auto-calibration | Disable auto-calibration |
| DI3 | Calibrate zero-point | Calibrate zero-point |
| DI4 | Calibrate end-point | Calibrate end-point |
| **Measurement range control** | | |
| DO1 | Measuring range feedback | |
| DO2 | | |
| DO3 | | |
| DO4 | | |
| DI1 | Measuring range switch-over | |
| DI2 | | |
| DI3 | | |
| DI4 | | |
| **Limit values** | | |
| DO1 | Limitation | |
| DO2 | Limitation | |
| DO3 | Limitation | |
| DO4 | Limitation | |
| DI1 | Calibration cells on/off | |
| DI2 | Hold current output | |
| DI3 | Pump on/off | |
| DI4 | External failure | |
| **Calibration control** | | |
| DO1 | External solenoid valve sample gas | |
| DO2 | External solenoid valve zero gas | |
| DO3 | External solenoid valve span gas | |
| DO4 | External pump on/off | |
| DI1 | Pump on/off | |
| DI2 | External failure | |
| DI3 | External failure | |
| DI4 | External solenoid valve sample gas | |

### Analog output modules

The analog output modules is available in two variants:

- As a 2-way analog output module with two independent analog outputs
- As a 4-way analog output module with four independent analog outputs

### Analog outputs AO1 to AO4

0/4 to 20 mA (factory-set to 4 to 20 mA), common negative pole, electrically isolated from ground, freely connectible to ground, max. gain relative to protective ground potential 50 V, max. load 750 Ohm. Resolution 16 bit.
The output signal cannot be lower than 0 mA.

### Electrical connections

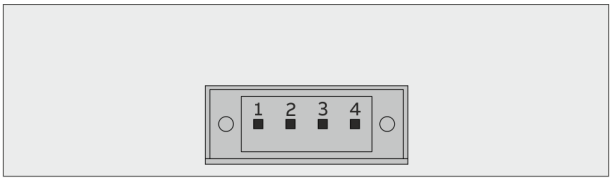


**Figure 10: 2-way analog output module**




**Figure 11: 4-way analog output module**

| Pin | Signal |
|---|---|
| 1 | AO1+ |
| 2 | AO1– |
| 3 | AO2+ |
| 4 | AO2– |
| 5 | AO3+ |
| 6 | AO3– |
| 7 | AO4+ |
| 8 | AO4– |

### Version

4-pole or 8-pole plug-in terminal strip with counter plug (included in the scope of delivery).

### Analog input modules

### Electrical connections

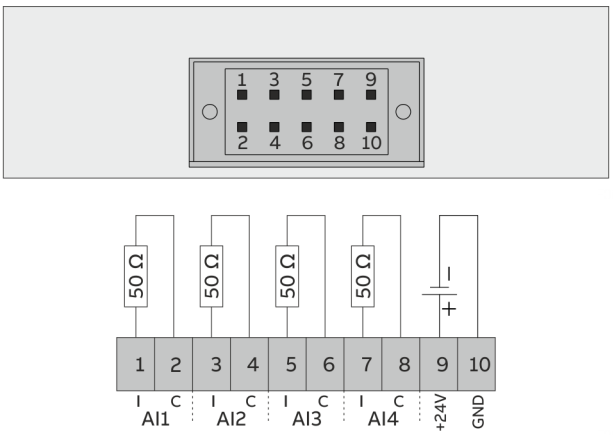


**Figure 12: Analog input module**

| Pin | Signal | Description |
|---|---|---|
| 1 | AI1+ | –20 to +20 mA, load 50 Ω, |
| 2 | AI1– | up to 10 V isolated from each other |
| 3 | AI2+ | |
| 4 | AI2– | |
| 5 | AI3+ | |
| 6 | AI3– | |
| 7 | AI4+ | |
| 8 | AI4– | |
| 9 | +24 V | +24 V DC for supply of an external sensor, fused with |
| 10 | GND | 100 mA (self-resetting fuse) |

### Design

2x5-pin terminal strip with mating connector (included in the scope of delivery).

# … Electrical connections

## Design AO2040 Ex-p for use in Zone 1, 21 and Zone 2, 22

### Purging and monitoring unit FS870S

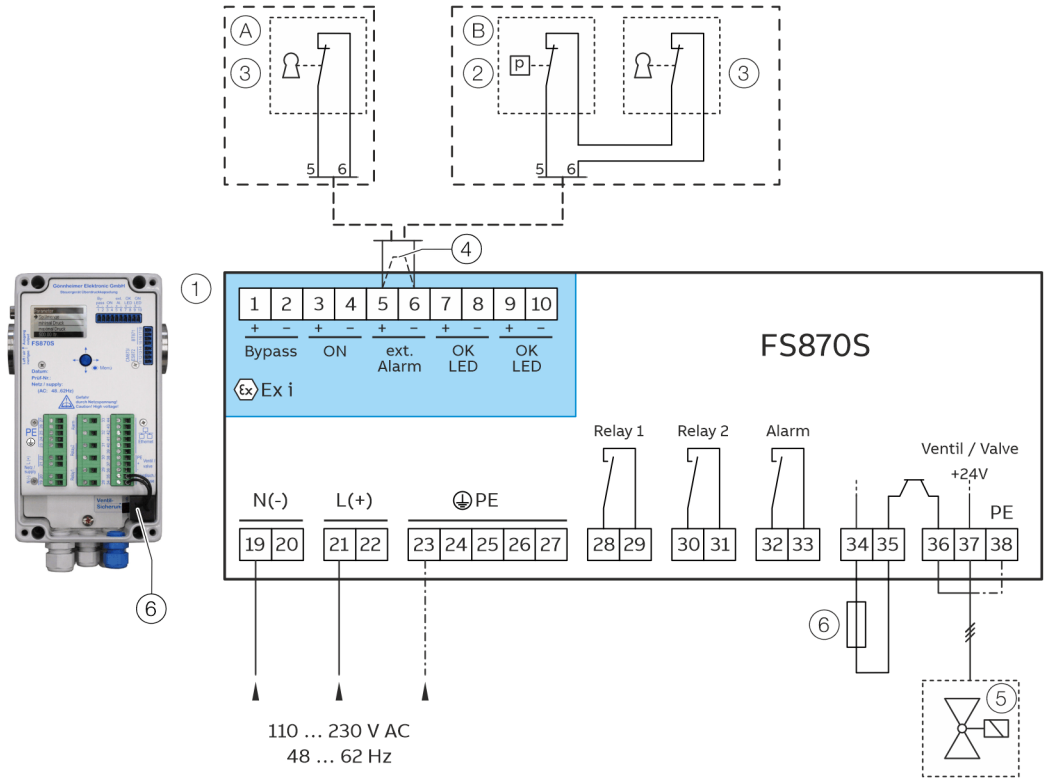


Ⓐ Key switch for all analyzer modules except Fidas24

① Purging and monitoring unit FS870S

② Pressure switch for monitoring of the instrument air

③ Key switch for version with Equipment Protection Level (EPL) Dc/Db

Ⓑ Pressure and key switch for Fidas24 analyzer module

④ Bridge if no pressure or key switch is connected

⑤ Magnetic valve for the purging gas

⑥ Fuse for purging gas solenoid valve

**Figure 13: Purging and monitoring unit FS870S**

**Note**

The components ②, ③, ⑤, ⑥ as well as the power supply to the gas analyzer are pre-wired at the factory.

### Connections for power supply on the FS870S purging and monitoring unit

| Terminal | Function/comments |
|---|---|
| 19 / N | Neutral conductor |
| 21 / L | Phase |
| 23 / PE / ⏚ | Protective earth (PE) |

### Relay output connections

| Terminal | Function/comments |
|---|---|
| 28 / 29<br>30 / 31 | **Relay output 1 / 2**<br>De-energize the gas analyzer, pre-wired at the factory |
| 32<br>33 | **Alarm output**<br>Potential-free relay output for external signal transmitter, maximum 235 V AC, 5 A |

### Connections for intrinsically safe inputs/outputs

| Terminal | Function/comments |
|---|---|
| 1 / 2 | **Not assigned** |
| 3 / 4 | **Not assigned** |
| 5 / 6 | **Input “Ext. Alarm“**<br>Connected to the pressure switch internally, for monitoring of the instrument air supply.<br>With devices for category 3D / 2D (Dc / Db), the additional key switch is also connected here. |
| 7+ / 8– | **Not assigned** |
| 9+ /10– | **Not assigned** |

# Gas connections

## Uras26

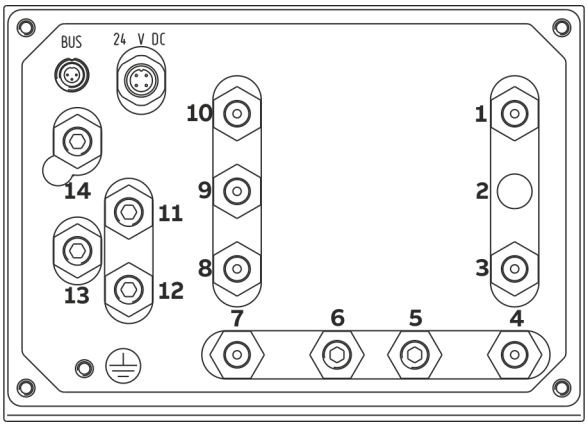


**Figure 14: Gas connections Uras26**

Figure 14 shows the assignment of the gas connections as an example for the three variants:

Ⓐ 1 gas path with 1 sample cell,
Ⓑ 1 gas path with 2 sample cells in series and
Ⓒ 2 separate gas paths with 1 sample cell each.

### Gas connections Uras26

| Pos. | Connection | Supplementary information | Design |
|---|---|---|---|
| **1** | Pressure Sensor for external pressure measurement (option) | The pressure sensor is connected to Terminal **1** via an FPM hose if the internal gas lines are designed as PTFE or stainless steel pipes, or if the 'Pressure sensor connected outside by hose' option is ordered. | ⅛-NPT internal thread (stainless steel 1.4305)<br>• Connection of hose lines: Straight screw-in socket (PP) with hose nozzles for hoses with inside diameter 4 mm (included in scope of delivery)<br>• Connection of pipelines: Screw-in fittings (not included in the scope of delivery) |
| **2** | not used | — | |
| **3** | Sample gas inlet (gas path 1) | Variant Ⓐ, Ⓑ or Ⓒ. | |
| **4** | Sample gas outlet (gas path 1) | For one measuring cell (variant Ⓐ) and for two measuring cells with separate gas paths (variant Ⓒ) | |
| **5** | Purge gas inlet (housing) | Option | |
| **6** | Purge gas outlet (housing) | Optional, also with flow sensor | |
| **7** | Sample gas inlet (gas path 2) | Variant Ⓒ | |
| **8** | Sample gas outlet (gas path 2) | Variant Ⓒ | |
| | Sample gas outlet (gas path 1) | For two sample cells in series (variant Ⓑ) | |
| **9** | Reference gas inlet | Optional, sample cell 1 flowing reference gas | |
| **10** | Reference gas outlet | | |

### Gas connections pneumatic module (option)

| Pos. | Connection | Supplementary information | Design |
|---|---|---|---|
| **11** | Sample gas inlet (gas path 1) | Variant Ⓐ, Ⓑ or Ⓒ. | ⅛-NPT internal thread (stainless steel 1.4305)<br>• Connection of hose lines: Straight screw-in socket (PP) with hose nozzles for hoses with inside diameter 4 mm (included in scope of delivery)<br>• Connection of pipelines: Screw-in fittings (not included in the scope of delivery) |
| **12** | Endpoint gas inlet (gas path 1) or sample gas inlet (gas path 2) | With 3 solenoid valves<br>For variant Ⓒ: Gas path 2 (only with flow sensor) | |
| **13** | Test gas/zero point gas inlet (gas path 1)<br>or sample gas outlet (gas path 2) | With 1 or 3 solenoid valves<br>For variant Ⓒ: Gas path 2 (only with flow sensor) - in this case to be connected to sample gas input **7** | |
| **14** | Sample gas outlet (gas path 1) | Variant Ⓐ, Ⓑ or Ⓒ – to be connected to sample gas inlet **3** | |

# … Gas connections

## Limas21

**Limas21 UV:**
**Standard cell, quartz cell with FPM hoses, center connection cell made of aluminum or quartz**

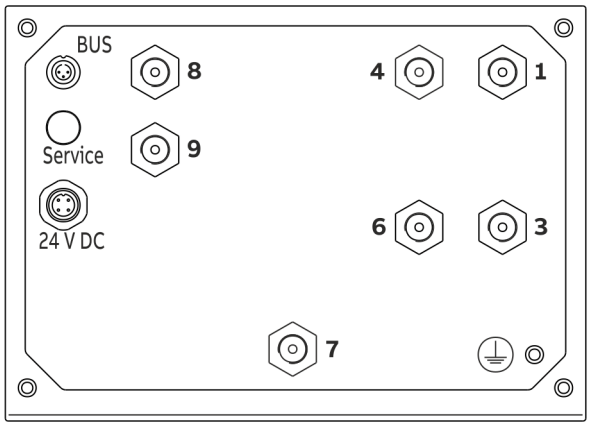


**Limas21 UV:**
**Quartz cell with PFA Tubes**

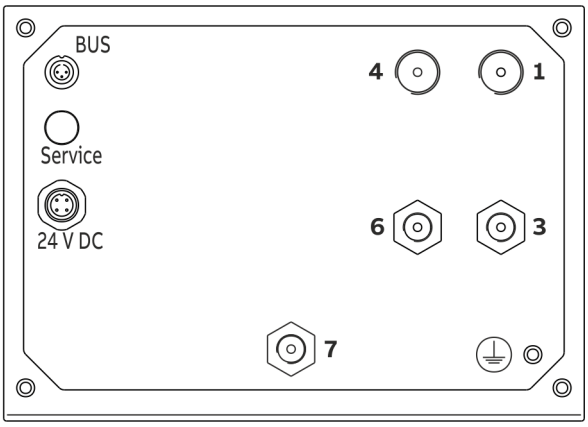


**Figure 15: Limas21 UV gas connections**

### Limas21 UV gas connections

| Pos. | Connection | Additional information | Design |
|---|---|---|---|
| **1** | Sample gas inlet | — | ⅛-NPT internal thread (stainless steel 1.4305) |
| **3** | Purge gas inlet housing | Option | |
| **4** | Sample gas outlet | — | • Connection of hose lines: Straight screw-in socket (PP) with hose nozzles for hoses with inside diameter 4 mm (included in scope of delivery)<br>• Connection of pipelines: Screw-in fittings (not included in the scope of delivery) |
| **6** | Purge gas outlet housing | Option | |
| **7** | Pressure sensor | The pressure sensor is routed to the outside via an FPM hose when the internal gas lines are made of PTFE, stainless steel or PFA. | |
| **8** | End-point gas inlet | Option with 3 solenoid valves, only for version with FPM hoses | |
| **9** | Zero-point gas inlet | Option, with 1 or 3 solenoid valves, only for version with FPM hoses | Connection to quartz cell with PFA tube<br>• PFA 6/4 mm, screw-in fittings (not included in scope of delivery) |

**Limas21 HW**

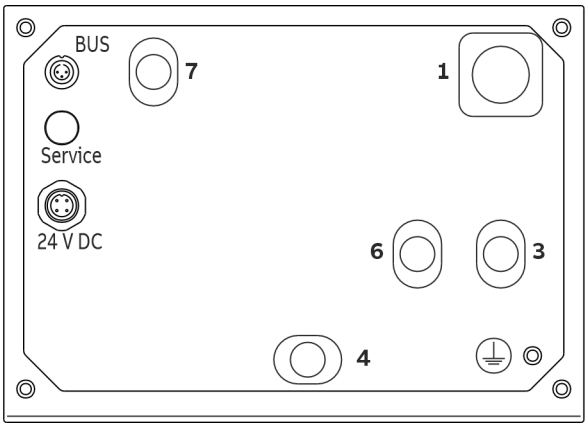


**Figure 16: Limas21 HW gas connections**

## Limas21 HW gas connections

| Pos. | Connection | Additional information | Design |
|---|---|---|---|
| **1** | Sample gas inlet | — | ⅛-NPT internal thread |
| **3** | Purge gas inlet housing | — | (stainless steel 1.4305) |
| **4** | Sample gas outlet | Install the exhaust air line at a gradient, leading away from the gas analyzer. | |
| **6** | Purge gas outlet housing | — | |
| **7** | Pressure sensor | The pressure sensor is routed to the outside via an FPM hose. | |

# … Gas connections

## Magnos28

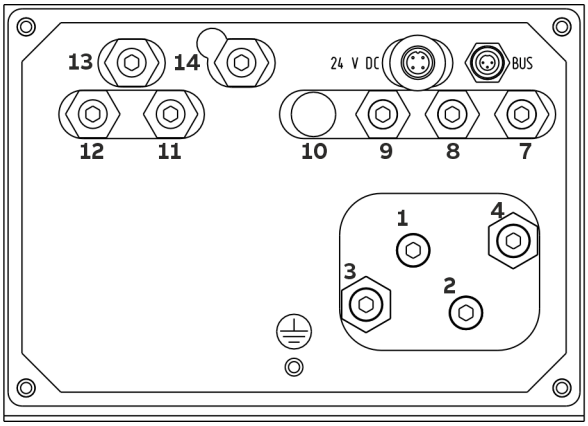


**Figure 17: Magnos28 gas connections**

### Magnos28 gas connections

The sample cell is connected directly to the gas ports.

| Pos. | Connection | Supplementary information | Design |
|---|---|---|---|
| **1** | Sample gas inlet | — | ⅛ NPT internal thread<br>(stainless steel 1.4305)<br>• Connection of hose lines:<br>Straight screw-in socket (PP) with hose nozzles for hoses with inside diameter 4 mm (included in scope of delivery)<br>• Connection of pipelines:<br>Screw-in fittings<br>(not included in the scope of delivery) |
| **2** | Sample gas outlet | — | |
| **3** | Purge gas inlet analyzer | Option | |
| **4** | Purge gas outlet analyzer | | |
| **7** | Purge gas inlet housing | Option | |
| **8** | Purge gas outlet housing | Optional, also with flow sensor | |
| **9** | Pressure sensor 1 | Option. The pressure sensor is routed to the outside via an FPM hose. For measurements in suppressed measurement ranges, the sensor **9** and sample gas **2** outlet have to be connected to each other via a T-piece and with the use of short conductors. | |
| **10** | Pressure Sensor 2 | Option. Second pressure sensor for additional external pressure measurement | |

### Gas connections pneumatic module (option)

| Pos. | Connection | Supplementary information | Design |
|---|---|---|---|
| **11** | Sample gas inlet | — | ⅛ NPT internal thread<br>(stainless steel 1.4305)<br>• Connection of hose lines:<br>Straight screw-in socket (PP) with hose nozzles for hoses with inside diameter 4 mm (included in scope of delivery)<br>• Connection of pipelines:<br>Screw-in fittings<br>(not included in the scope of delivery) |
| **12** | End-point gas inlet | With 3 solenoid valves | |
| **13** | Test gas/zero point gas inlet | With 1 or 3 solenoid valves | |
| **14** | Sample gas outlet | To be connected to sample gas inlet **1** | |

## Magnos27

**Sample cell connection by means of FPM hoses** **Sample cell direct connection**

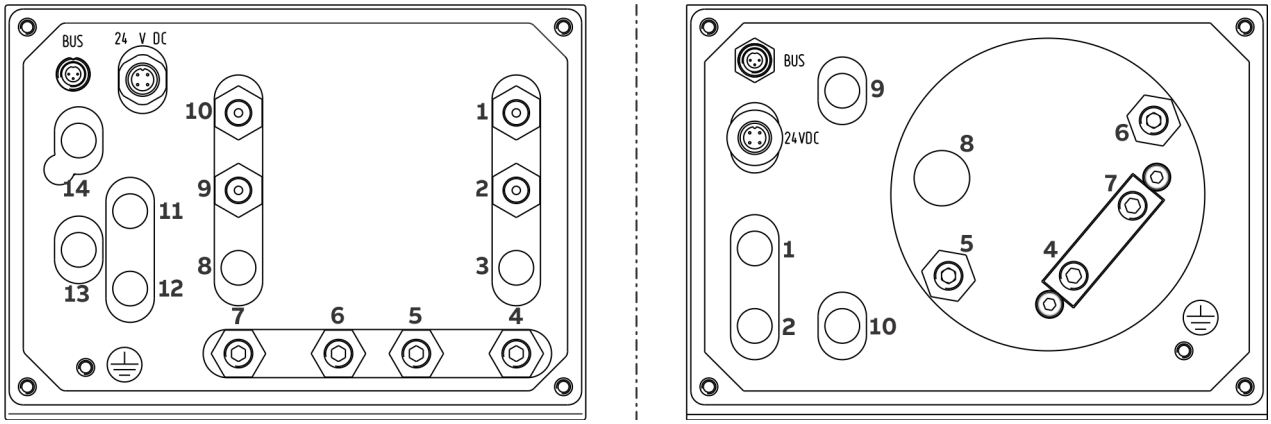


**Figure 18: Magnos27 gas connections**

### Magnos27 gas connections

**Note on the direct connection of the sample chamber**

The sample cell is connected directly to the gas ports (for wall-mount housing only). Application e.g. when external gas supply is connected and for short $T_{90}$ times.

| Pos. | Connection | Supplementary information | Design |
|---|---|---|---|
| **1** | Purge gas inlet housing | Option | ⅛-NPT internal thread (stainless steel 1.4305)<br>• Connection of hose lines: Straight screw-in socket (PP) with hose nozzles for hoses with inside diameter 4 mm (included in scope of delivery)<br>• Connection of pipelines: Screw-in fittings (not included in the scope of delivery) |
| **2** | Purge gas outlet housing | Optional, also with flow sensor | |
| **3** | not used | — | |
| **4** | Sample gas inlet | — | |
| **5** | Purge gas inlet analyzer | — | |
| **6** | Purge gas outlet analyzer | — | |
| **7** | Sample gas outlet | — | |
| **8** | not used | — | |
| **9** | Pressure sensor 1 | Option. The pressure sensor is routed to the outside via an FPM hose. | |
| **10** | Pressure Sensor 2 | Option. Second pressure sensor for additional external pressure measurement | |

### Gas connections pneumatic module (option)

| Pos. | Connection | Supplementary information | Design |
|---|---|---|---|
| **11** | Sample gas inlet | — | ⅛-NPT internal thread (stainless steel 1.4305)<br>• Connection of hose lines: Straight screw-in socket (PP) with hose nozzles for hoses with inside diameter 4 mm (included in scope of delivery)<br>• Connection of pipelines: Screw-in fittings (not included in the scope of delivery) |
| **12** | End-point gas inlet | With 3 solenoid valves | |
| **13** | Test gas/zero point gas inlet | With 1 or 3 solenoid valves | |
| **14** | Sample gas outlet | To be connected to sample gas inlet **4** | |

# … Gas connections

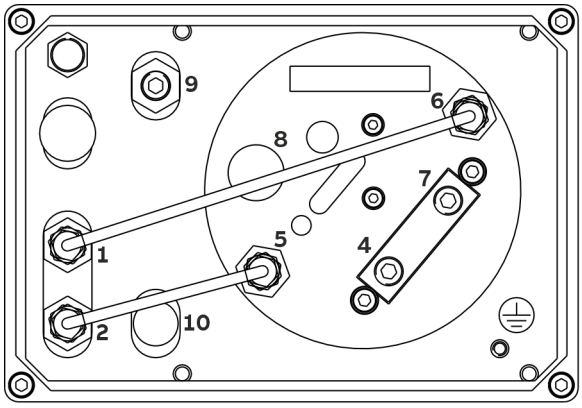


**Figure 19: Magnos27 gas connections with direct measuring chamber connection**

### Magnos27 gas connections

**Note on the direct connection of the sample chamber**

The sample cell is connected directly to the gas ports. Application e.g. when external gas supply is connected and for short $T_{90}$ times.

| Pos. | Connection | Additional information | Design |
|---|---|---|---|
| **1** | Purge gas inlet housing | Factory-installed hoses/pipes | ⅛-NPT internal thread<br>(stainless steel 1.4305)<br>• Connection of hose lines:<br>Straight screw-in socket (PP) with hose nozzles for hoses with inside diameter 4 mm (included in scope of delivery)<br>• Connection of pipelines:<br>Screw-in fittings<br>(not included in the scope of delivery) |
| **2** | Purge gas outlet housing | Factory-installed hoses/pipes | |
| **3** | not used | — | |
| **4** | Sample gas inlet | — | |
| **5** | Purge gas inlet analyzer | Factory-installed hoses/pipes | |
| **6** | Purge gas outlet analyzer | Factory-installed hoses/pipes | |
| **7** | Sample gas outlet | — | |
| **8** | not used | — | |
| **9** | Pressure sensor 1 | Option. The pressure sensor is routed to the outside via an FPM hose. | |
| **10** | Pressure Sensor 2 | Option. Second pressure sensor for additional external pressure measurement | |

## ZO23

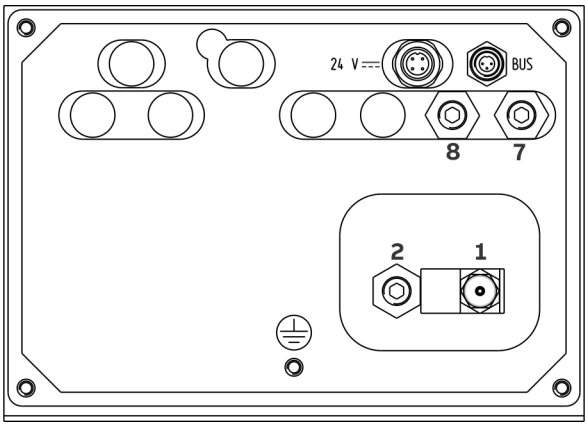


**Figure 20: ZO23 gas connections**

### ZO23 gas connections

The measuring chamber is connected to sample gas inlet connection **1** via a stainless steel pipe and to sample gas outlet connection **2** via an FPM hose.

| Pos. | Connection | Supplementary information | Design |
|---|---|---|---|
| **1** | Sample gas inlet | — | 3 mm Swagelok® screwed connection |
| **2** | Sample gas outlet | — | ⅛-NPT internal thread |
| **7** | Purge gas inlet housing | Only for IP54/IP65 version | (stainless steel 1.4305) |
| **8** | Purge gas outlet housing | Only for IP54/IP65 version | • Connection of hose lines:<br>Straight screw-in socket (PP) with hose nozzles for hoses with inside diameter 4 mm (included in scope of delivery)<br>• Connection of pipelines:<br>Screw-in fittings (not included in the scope of delivery) |

# … Gas connections

## Caldos25

**Standard Version**

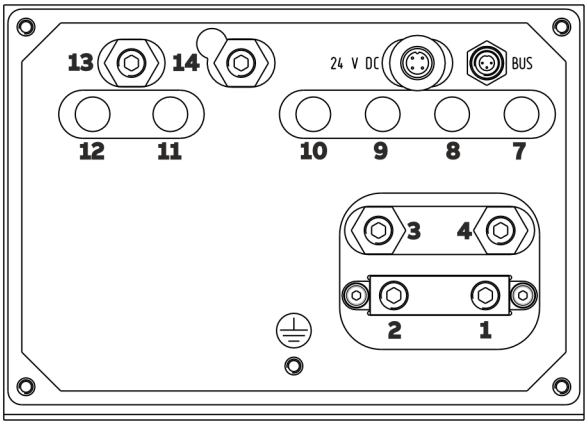


**Versions for corrosive sample gas or for flowing reference gas**

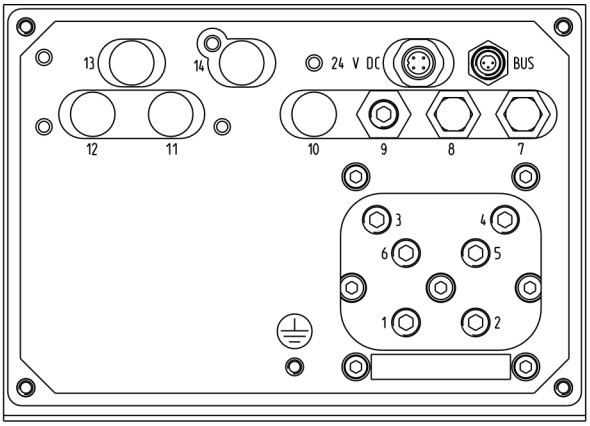


**Figure 21: Caldos25 gas connections**

### Caldos25 gas connections

The sample cell is connected directly to the gas ports.

| Pos. | Connection | Supplementary information | Design |
|---|---|---|---|
| **1** | Sample gas inlet | — | ⅛-NPT internal thread (stainless steel 1.4305)<br>• Connection of hose lines: Straight screw-in socket (PP) with hose nozzles for hoses with inside diameter 4 mm (included in scope of delivery)<br>• Connection of pipelines: Screw-in fittings (not included in the scope of delivery)<br>**Note**<br>Gas connections **1** to **6** in the versions for corrosive sample gas or for flowing reference gas are made of PVC-C.<br>Do not use metal tubing connectors or adapters! |
| **2** | Sample gas outlet | — | |
| **3** | Purge gas inlet analyzer | — | |
| **4** | Purge gas outlet analyzer | — | |
| **5** | Reference gas inlet | Not in version for corrosive sample gas | |
| **6** | Reference gas outlet | | |
| **7** | Purge gas inlet housing | Option | |
| **8** | Purge gas outlet housing | Optional, also with flow sensor | |
| **9** | Pressure sensor 1 | Option. The pressure sensor is routed to the outside via an FPM hose. | |
| **10** | Pressure Sensor 2 | Option. Second pressure sensor for additional external pressure measurement | |

### Pneumatic module gas connections (optional – not in version with sample cell direct connection)

| Pos. | Connection | Supplementary information | Design |
|---|---|---|---|
| **11** | Sample gas inlet | — | ⅛-NPT internal thread (stainless steel 1.4305)<br>• Connection of hose lines: Straight screw-in socket (PP) with hose nozzles for hoses with inside diameter 4 mm (included in scope of delivery)<br>• Connection of pipelines: Screw-in fittings (not included in the scope of delivery) |
| **12** | End-point gas inlet | With 3 solenoid valves | |
| **13** | Test gas/zero point gas inlet | With 1 or 3 solenoid valves | |
| **14** | Sample gas outlet | To be connected to sample gas inlet **1** | |

## Caldos27

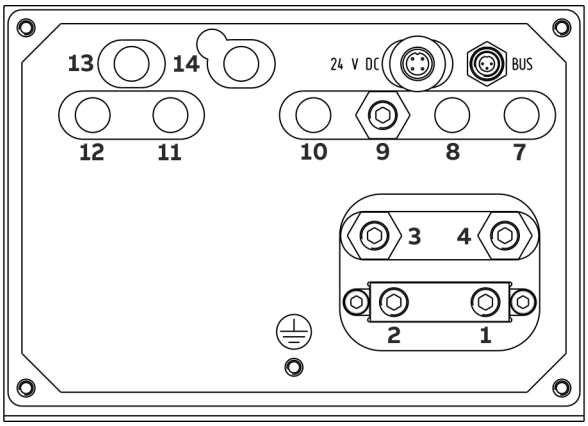


**Figure 22: Caldos27 gas connections**

### Caldos27 gas connections

The sample cell is connected directly to the gas ports.

| Pos. | Connection | Supplementary information | Design |
|---|---|---|---|
| **1** | Sample gas inlet | — | ⅛-NPT internal thread<br>(stainless steel 1.4305)<br>• Connection of hose lines:<br>Straight screw-in socket (PP) with hose nozzles for hoses with inside diameter 4 mm (included in scope of delivery)<br>• Connection of pipelines:<br>Screw-in fittings<br>(not included in the scope of delivery) |
| **2** | Sample gas outlet | — | |
| **3** | Purge gas inlet analyzer | — | |
| **4** | Purge gas outlet analyzer | — | |
| **7** | Purge gas inlet housing | Option | |
| **8** | Purge gas outlet housing | Optional, also with flow sensor | |
| **9** | Pressure sensor 1 | The pressure sensor is routed to the outside via an FPM hose. | |
| **10** | Pressure Sensor 2 | Option. Second pressure sensor for additional external pressure measurement | |

### Gas connections pneumatic module (option)

| Pos. | Connection | Supplementary information | Design |
|---|---|---|---|
| **11** | Sample gas inlet | — | ⅛-NPT internal thread<br>(stainless steel 1.4305)<br>• Connection of hose lines:<br>Straight screw-in socket (PP) with hose nozzles for hoses with inside diameter 4 mm (included in scope of delivery)<br>• Connection of pipelines:<br>Screw-in fittings<br>(not included in the scope of delivery) |
| **12** | End-point gas inlet | With 3 solenoid valves | |
| **13** | Test gas/zero point gas inlet | With 1 or 3 solenoid valves | |
| **14** | Sample gas outlet | To be connected to sample gas inlet **1** | |

# … Gas connections

## Fidas24

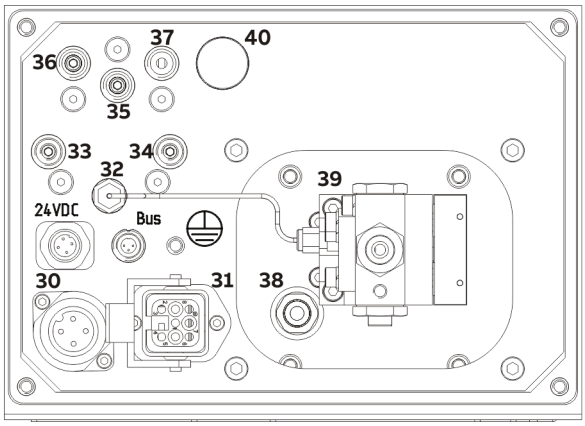


**Figure 23: Gas and electric connections Fidas24 and Fidas24 NMHC**

### Gas connections of the analyzer

| Pos. | Connection | Additional information | Design |
|---|---|---|---|
| **32** | Test gas outlet | — | ⅛ NPT female thread for threaded connections (not included in scope of supply) |
| **33** | Zero-point gas inlet | — | |
| **34** | End-point gas inlet | — | |
| **35** | Combustion air inlet | — | |
| **36** | Combustion gas inlet | — | |
| **37** | Instrument air inlet | — | |
| **38** | Exhaust outlet | **Notice**<br>The inside diameter of the exhaust line must be increased to Ø ≥ 10 mm a maximum of 30 cm downstream of the exhaust outlet. Install the exhaust air line at a gradient, leading away from the gas analyzer. | Compression fitting for pipes with an outside diameter of 6 mm |
| **39** | Sample gas inlet | **Sample gas line connection**<br>To heated sample gas inlet:<br>• In wall-mount housing: bottom and right<br>• In 19″ housing: back, top and bottom<br>To unheated sample gas inlet:<br>• In wall-mount and 19″ housing: back | Fitting for PTFE tubes or stainless steel tubes with an outer diameter of 6 mm |
| **40** | Pressure equalizing opening | With protective filter (the protective filter must be protected against humidity) | — |

**Note**
With the IP54 version of the Fidas24, the operator must ensure the IP protection class of the housing by taking additional design measures at the pressure equalization opening.

### Electrical connections

| Pos. | Connection | Additional information | Design |
|---|---|---|---|
| **30** | Power supply 115 / 230 V AC | For heating the detector with converter and sample gas inlet | 4-pin male connector, connection cable included in scope of supply |
| **31** | Power supply (output) | Electrical connection to the heated sample gas connection | Permanently connected |

## Fidas24 Ex

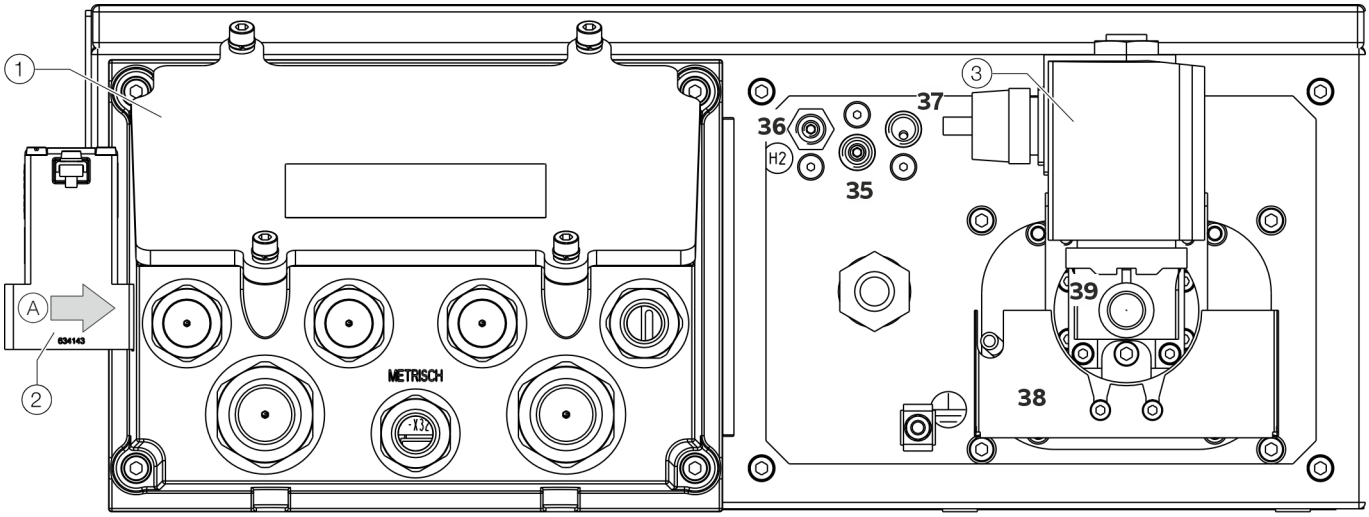


1 Connection box
2 Purging gas valve
3 Sample gas valve

**Figure 24: Position of the gas connections AO2040-Fidas24 Ex**

| Pos. | Connection | Additional information | Design |
|---|---|---|---|
| **35** | Combustion air inlet | — | ⅛" NPT female thread for threaded connections (not included in scope of supply) |
| **36** | Combustion gas inlet | With pre-installed flow restrictor | |
| **37** | Instrument air inlet | — | |
| **38** | Exhaust outlet | — | External thread for connecting the exhaust air pipe (stainless steel pipe with an external diameter of 10 mm, included in the delivery of the gas analyzer) |
| **39** | Sample gas inlet | Connection options for heated or unheated sample gas lines. | G ¼" female thread for threaded connections (not included in scope of supply) |
| A | Purging gas inlet | Purging gas inlet for the pressurized enclosure Ex-p. | G ⅜" NPT female thread for threaded connections (not included in scope of supply) |

# Dimensions

## 19” housing (model AO2020)

Dimensions in mm (in)

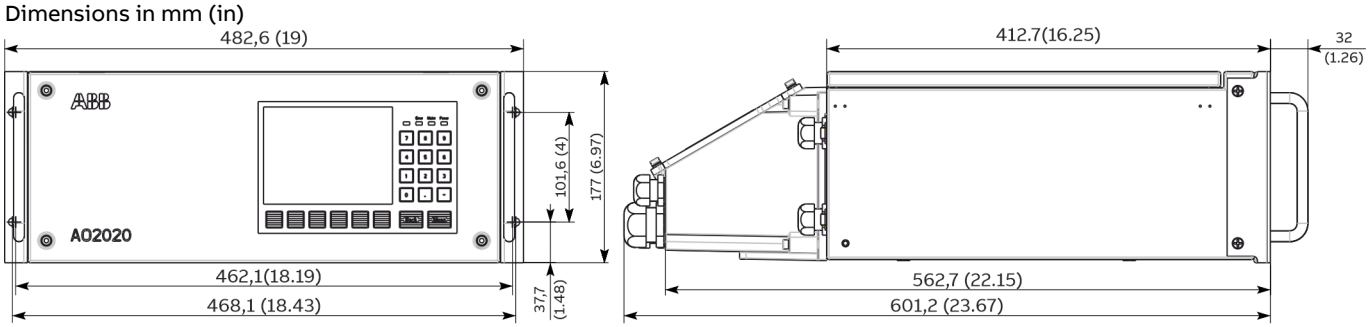


**Figure 25: AO2020 dimensions**

## Wall-mount housing (model AO2040)

Dimensions in mm (in)

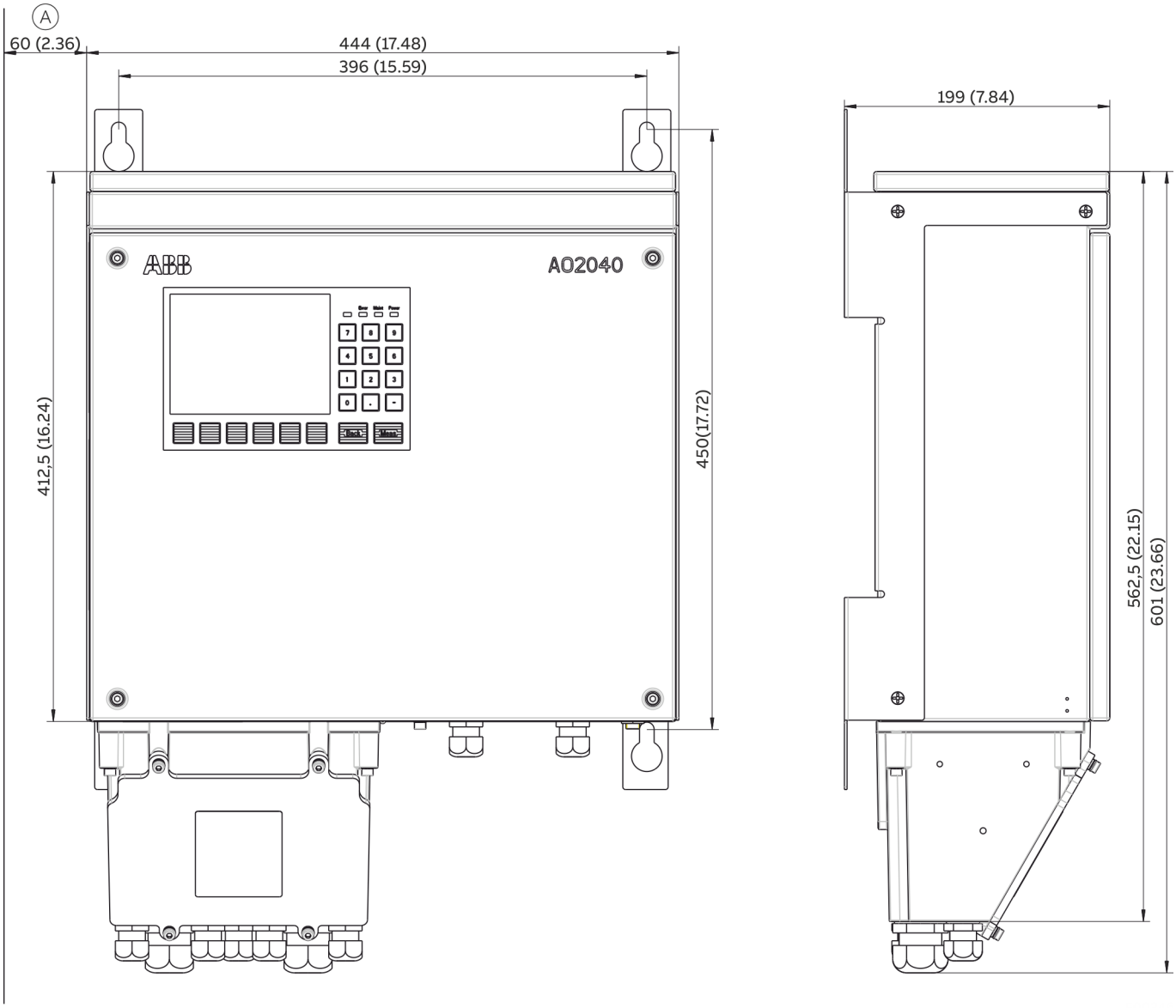


Ⓐ Consider free space to swivel the door

**Figure 26: AO2040 dimensions**

**Additional information**

- In the IP54/IP65 version, the connection box shown in the dimensional drawings is flange-mounted to the housing.
- Adhere to the requirements at the installation site , refer to **Requirements for the installation site** on page 69.
- Take into consideration the additional space required for the connecting lines (approx. 100 mm).
- During installation of the Fidas24 gas analyzer with heated sample gas connector, take into consideration the additional space requirement for the heated sample gas impulse line (observe minimum bend radius in accordance with manufacturer data).
- When installing the wall unit, make sure to provide free space on the left side needed to swing out the door (approx. 60 mm).
- When installing the wall-mounted housing, ensure that there is additional free space above the housing, as some modules are only accessible from the top (approx. 300 mm).
- Install both the 19” housing and the wall unit such that the display is oriented vertically.
- For sufficient air circulation of several system housings in a 19” rack unit, mount with a distance of at least 1 HU between each other.

**Note**

With the IP54 version of the Fidas24, the operator must ensure the IP protection class of the housing by taking additional design measures at the pressure equalization opening.

# … Dimensions

## AO2040 Ex-p with Uras26, Limas21, Magnos27/28, Caldos25/27, ZO23 and electrochemical oxygen sensor

Dimensions in mm (in)

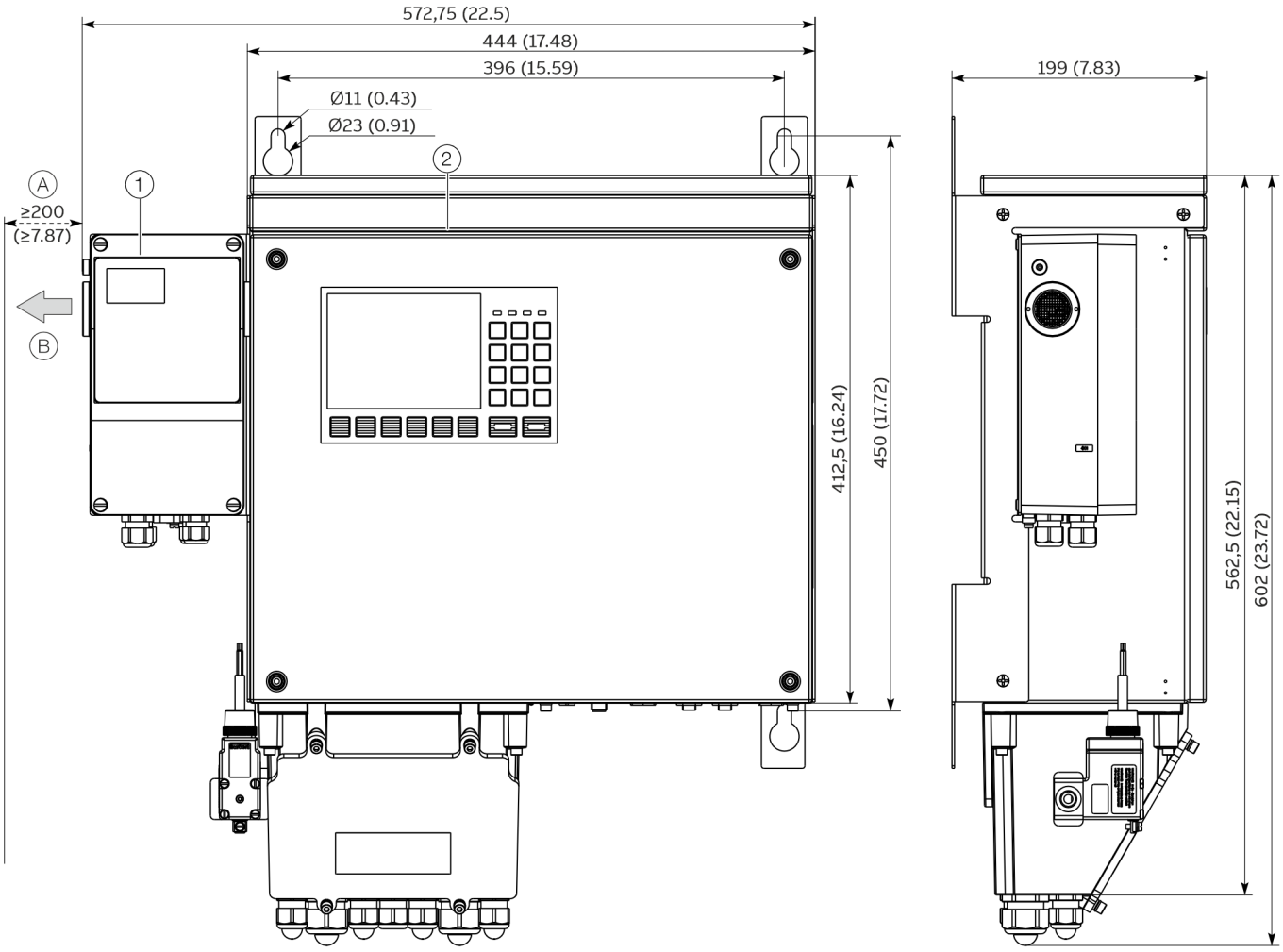


(A) Free space for unobstructed discharge of the purge gas
(B) Purge gas outlet
(1) Purging and monitoring unit FS870S
(2) System housing AO2040

**Figure 27: Dimensions AO2040 with analyzer module Uras26, Limas21, Magnos27/28, Caldos25/27, ZO23 and electrochemical oxygen sensor**

### Additional information

- The connection box shown in the dimensional drawings is flange-mounted to the housing.
- Adhere to the requirements at the installation site , refer to **Requirements for the installation site** on page 69.
- The air outlet of the purging and monitoring unit must not be blocked.
- Take into consideration the additional space required for the connecting lines (approx. 100 mm).
- When mounting the gas analyzer, take the space required for the heated sample gas lines into account (observe the minimum bending radius, according to manufacturer's specifications).
- When installing the wall-mounted housing, ensure that there is additional free space above the housing, as some modules are only accessible from the top (approx. 300 mm).
- Mount the wall-mounted housing in such a way that the LCD display is clearly visible.

## AO2040-Fidas24 Ex

Dimensions in mm (in)

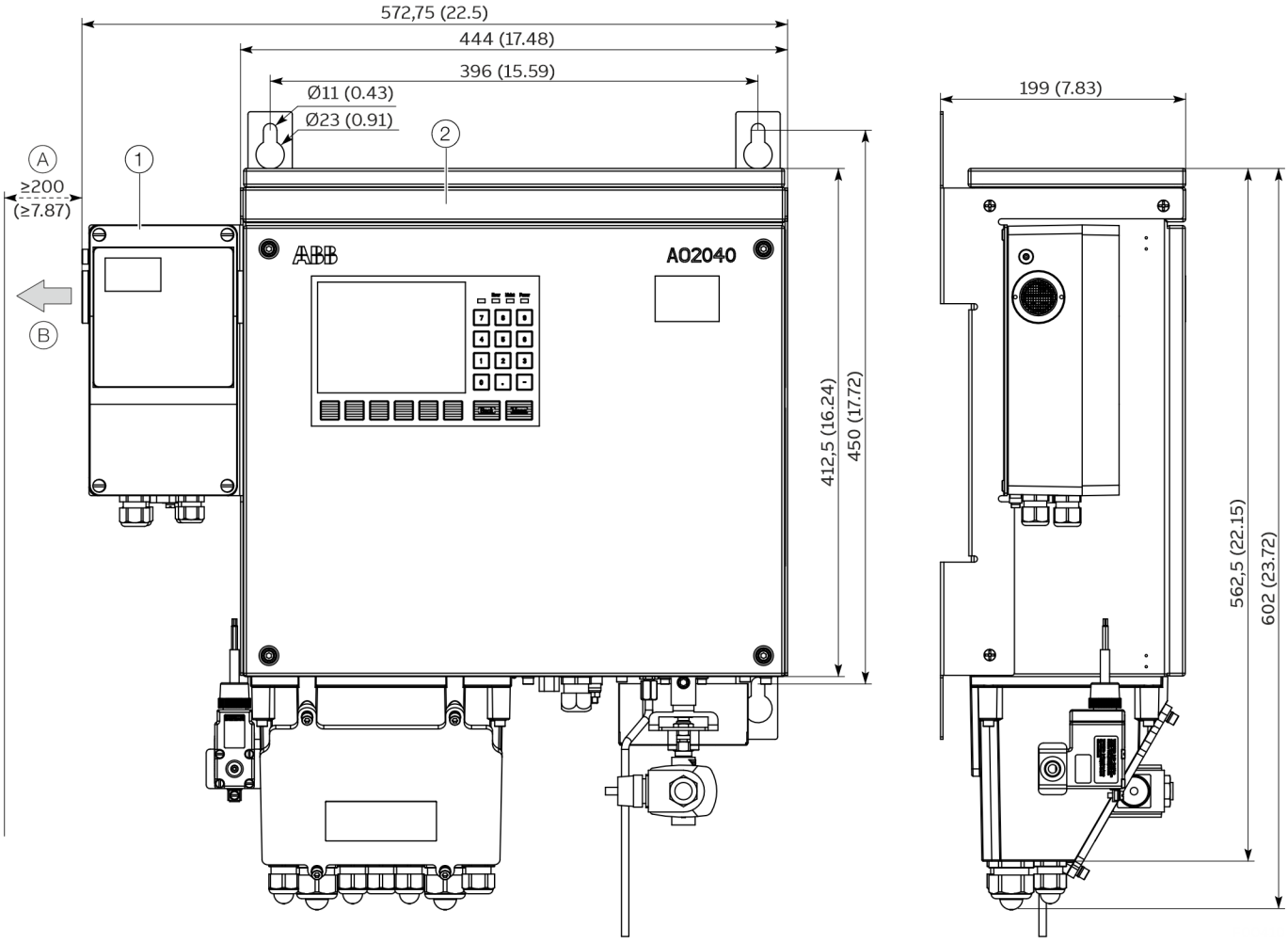


(A) Free space for unobstructed discharge of the purge gas

(B) Purge gas outlet

(1) Purging and monitoring unit FS870S

(2) System housing AO2040-Fidas24 Ex

**Figure 28: Dimensions AO2000 with analyzer module Fidas24**

**Additional information**

- The connection box shown in the dimensional drawings is flange-mounted to the housing.
- Adhere to the requirements at the installation site , refer to **Requirements for the installation site** on page 69.
- The air outlet of the purging and monitoring unit must not be blocked.
- Take into consideration the additional space required for the connecting lines (approx. 100 mm).
- When mounting the gas analyzer, take the space required for the heated sample gas lines into account (observe the minimum bending radius, according to manufacturer's specifications).
- When installing the wall-mounted housing, ensure that there is additional free space above the housing, as some modules are only accessible from the top (approx. 300 mm).
- Mount the wall-mounted housing in such a way that the LCD display is clearly visible.

# Approvals, tests and certificates

## Performance tests

The gas analyzers of the AO2000 series Uras26 (measuring components CO, NO, $SO_2$, $CO_2$, $N_2O$) and electrochemical oxygen sensor (measuring component $O_2$) are suited for use in incineration plants that require approval in accordance with European Directives 2001/80/EC (13th BImSchV) and 2000/76/EG (17th BImSchV) as well as in annexes of the 27th/30th BImSchV and TA-Luft.
The requirements of QAL1 according to EN 15267 and EN 14181 are fulfilled.

- Report no. 821029 dated 6/30/2006;
  Announcement: BAnz of 10/14/2006, No. 194, page 6715.
- Report no. 1249694 dated 3/30/2009;
  Announcement: BAnz of 8/25/2009, No. 125, page 2932.
- Report no. 1710933 dated 9/30/2011;
  Announcement: BAnz of 3/2/2012, No. 36, page 923.
- Report no. 936/21217137/A dated 10/14/2011;
  Announcement: BAnz of 3/2/2012, No. 36, page 922.
- Report no. 1958844 dated 8/30/2013,
  Announcement: BAnz AT of 4/1/2014, No. B12, page 15.

**Uras26, Magnos28, oxygen sensor**
The AO2000 Series gas analyzers Uras26 (sample components CO, NO, NOx, $SO_2$, $N_2O$, $CO_2$), Magnos28 (sample component $O_2$) and electrochemical oxygen sensor (sample component $O_2$) meet the requirements of the 'MCERTS Performance Standards for Continuous Emission Monitoring Systems, Version 3.5 dated June 2016', EN 15267-3:2007 and QAL 1 in accordance with EN 14181:2014.
Certificate no. Sira MC080121/13 of 8/18/2017

**Limas21 UV**
The gas analyzers of the AO2000 series Limas21 UV (measuring components NO, $NO_2$, $SO_2$), and electrochemical oxygen sensor (measuring component $O_2$) are suited for use in incineration plants that require approval in accordance with European Directives 2001/80/EC (13th BImSchV) and 2000/76/EG (17th BImSchV) as well as in TA-Luft systems.
The requirements of QAL1 according to EN 15267 and EN 14181 are fulfilled.
Report no. 2231669.1 dated 9/1/2015;
Announcement: BAnz AT of March 14, 2016, No. B7, page 2.

**Fidas24**
The gas analyzer of the AO2000 series Fidas24 (measuring component Total-C) is suited for use in systems that require approval (13th BImSchV, 17th BImSchV, 30th BImSchV, TA-Luft) as well as in the annexes of the 27th BImSchV. The requirements of QAL1 according to EN 15267 and EN 14181 are fulfilled.
Report no. 936/21228173/A dated 10/21/2015;
Announcement: BAnz AT of March 14, 2016, No. B7, page 2.

**Uras26 – Marine**
The AO2000 Series gas analyzer Uras26 (sample components $SO_2$ and $CO_2$) is suited for use on vessels. The requirements of MEPC.184(59) and MEPC.259(68), Chapter 6 'Emission Testing' as well as the relevant requirements of Revised MARPOL Annex VI and NOx Technical Code 2008 are fulfilled.
Certificate No. 30652-15 HH of November 27, 2015

**Limas21 UV – Marine**
The AO2000 Series gas analyzer Limas21 UV (sample components NO, $NO_2$ and NOx) is suited for use on vessels.
The requirements of Revised MARPOL Annex VI and NOx Technical Code 2008 are fulfilled.
Certificate no. Doc no: 31786686/DNV; Issued in Hamburg on December 14, 2023

## CE conformity

The AO2000 series gas analyzers satisfy the requirements of the European directives:

- 2014/35/EU Low Voltage Directive,
- 2014/30/EU EMC Directive,
- 2014/34/EU ATEX Directive (explosion-proof designs only) and
- 2011/65/EU RoHS Directive

## Approval for USA and Canada – CSA

The AO2000 series gas analyzers are certified for use in 'general purpose' environments, evidenced by full compliance with standards CAN/CSA-C22.2 no. 61010-1-12 and UL Std. No. 61010-1 (Third Edition).

Certificate No. 70012655

## Approval for the customs union of Russia, Belarus and Kazakhstan – EAC TR CU

The AO2000 Series gas analyzers are certified for use in general purpose environment.

- EAC TR CU Certificate:
  ЕАЭС N RU Д-DE.HB26.B.0014519
- Metrological certificate for Russia:
  No. 79593-20

## Trademarks

Modbus is a registered trademark of Schneider Automation Inc.
PROFIBUS, PROFIBUS PA and PROFIBUS DP are registered trademarks of PROFIBUS & PROFINET International (PI)
Silcosteel is a registered trademark of the Restek Corporation.
Swagelok is a registered trademark of the Swagelok Company
Windows is a registered trademark of Microsoft Corporation.

**Sales** **Service**

# Notes

**ABB Measurement & Analytics**

For your local ABB contact, visit:
**go.abb/contact**

For more product information, visit:
**solutions.abb/analytical**

We reserve the right to make technical changes or modify the contents of this document without prior notice. With regard to purchase orders, the agreed particulars shall prevail.
ABB does not accept any responsibility whatsoever for potential errors or possible lack of information in this document.

We reserve all rights in this document and in the subject matter and illustrations contained therein. Any reproduction, disclosure to third parties or utilization of its contents – in whole or in parts – is forbidden without prior written consent of ABB.

© ABB 2026

3KXG111001R1001

DS/AO2000-EN Rev. I 11.2026