ADVANCED MICRO INSTRUMENTS
An ENPRO Company

Model 64
Percent Oxygen Probe
Operator Manual



Contents

Preface 3

Caution 3

Address 3

The AMI Model 64 Oxygen Probe Analyzer 4

Introduction 4

Features 4

Options 4

Oxygen Sensor 4

Gas Compatibility 5

Sensor Life 5

Installation and Operation 6

Receiving the Analyzer 6

Precaution 6

Installation 6

Location 6

Probe Connection 7

Initial Test 7

Output Connections 7

Sample Connection 7

Sensor Installation 8

Installation Notes 8

Operation 8

Calibration 8

Maintenance and Troubleshooting 10

Maintenance 10

Periodic Calibration 10

Specifications and Disclaimer 11

Specifications 11

Disclaimer 11

Glossary of Terms **12**

AMI WARRANTY & SUPPORT **14**

LIMITED WARRANTY/DISCLAIMER 14

Receiving the Analyzer 14

LIMITATION OF LIABILITY 14

LIMITATION OF REMEDIES 14

Factory Service and Support 14

Preface

Advanced Micro Instruments® (AMI) series of oxygen analyzers provide the latest in high-definition oxygen analysis. The series includes trace (ppm) and percent oxygen level models in several configurations. All of them share the same basic design approach, using state-of-the-art oxygen sensors and advanced high-definition electronics for noise and interference free performance.

The Model 64 is an extremely compact oxygen probe that contains a zirconium oxide sensor and all associated electronics using an advanced microprocessor design. It produces a linear voltage output corresponding to 0-25% oxygen. It requires no supporting electronics and is so stable that it can usually be installed and forgotten over its entire life. The sensor is expected to last up to ten years in continuous operation and indefinitely in storage. This means that these units can be stored as spare parts for years and used immediately with no need for replacing the sensor.

Caution

Read and understand this manual fully before attempting to use the instrument. In particular, understand the hazards associated with using flammable or poisonous gases, and associated with the contents of the sensor used.

Address

Advanced Micro Instruments
15501 Red Hill Avenue, Suite 100
Tustin, CA 92780 USA

(714) 848-5533

www.amio2.com

Last Revised: 2026.06

OM-300-021 Rev D

The AMI Model 64 Oxygen Probe Analyzer

Introduction

The AMI Oxygen Probe is designed for monitoring oxygen content in a nitrogen or similar inert gas stream. It operates on a single range, normally 0-25% oxygen, and produces an output typically 0 – 2.5 V DC over this range. It uses 7 – 24 VDC power, and it provides both a power and signal ground for lower signal offset. No calibration is provided internally: calibration is performed by the host system to which it is attached.

Features

- Percent oxygen in non-flammable samples
- General purpose self-contained oxygen sensor
- Extremely stable, long-life sensor
- Virtually unaffected by temperature changes
- Virtually unaffected by barometric pressure changes
- Virtually unaffected by humidity changes
- Virtually unaffected by flow rate changes
- Calibration interval 6 months
- Very small size
- Standard 0 – 2.5 V output
- Very low cost

Options

- 0 – 50% range
- 0 – 95% range

Oxygen Sensor

AMI uses a unique zirconium oxide sensor. This sensor measures the concentration of oxygen in a gas stream, using an oxygen specific chemistry. It generates an output current in proportion to the amount of oxygen present, and has zero output in the absence of oxygen, thus avoiding any requirement to zero the analyzer. The cell is almost linear throughout its range, and a built-in microprocessor corrects the residual non-linearity to better than 0.1%. The span calibration may be performed using standard span gases or ambient air, but the sensor is so stable that calibration is ordinarily not necessary.

Percent level analyzers are routinely calibrated on air. Air has a reliable 20.94% oxygen in it, when dry. In the case of its use as an area monitor it is advisable to use a known high quality air supply for calibration since the room air may not contain 20.94% of oxygen! High range sensors should be calibrated with a gas whose concentration is near the top of the range – 50% for the 0-50% unit, and 95% for the 0-95% unit.

Gas Compatibility

The zirconium oxide sensor operates internally at red heat, with platinum as its electrodes. This means that any oxidizable gases will react with any oxygen present and burn, reducing the apparent oxygen reading. It also means that gases which can decompose at high temperatures will do so. In the case of Freons this can produce hazardous byproducts. It also means that flammable mixtures of gases may be ignited. Sulfur containing gases and acid gases such as SO_2 will degrade the sensor and shorten its life.

DO NOT USE THIS PROBE WITH FLAMMABLE GASES OR HALOGEN CONTAINING GASES!!

Sensor Life

Unlike electrochemical sensors, the model 64 sensor does not degrade when it is not in use. Its life depends on the total amount of oxygen to which it is exposed while it is powered up. If it is powered continuously and exposed to air, the sensor will remain almost completely stable for several years and thereafter will gradually drop its reading for the next few years. If it is run on an 8-hour duty cycle, it will last three times as long. If it runs continuously at 5% oxygen, it will last at least 6 years before the sensor starts to change. If it is run at 5% oxygen on an 8-hour duty cycle, it will last maybe 18 years before the sensor starts to change.

Installation and Operation

Receiving the Analyzer

Precaution

When you receive the instrument, check the package for evidence of damage and if any is found, contact the shipper.

Installation

Location

The probe may be installed in any orientation. Typically, the gas connections are pointing downwards, but this is not necessary.

Connect the cable provided to the probe and to a suitable power supply (7-28 VDC) and monitoring system.

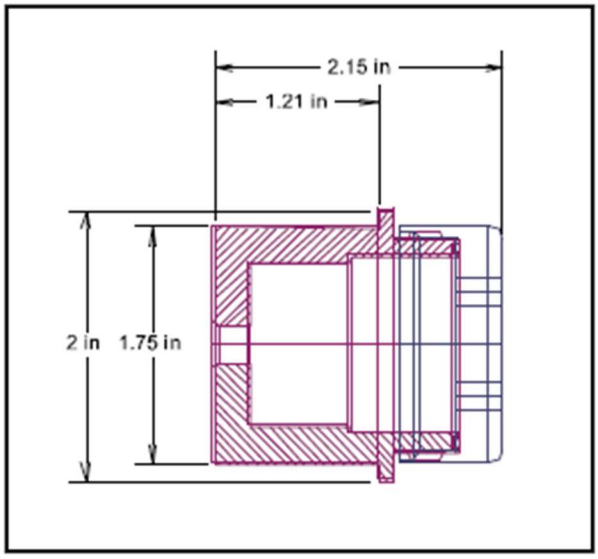

Figure 1. Probe dimensions

Probe Connection

The unit requires a DC power supply between about 7 and 28 volts at less than 500 mA. The actual current consumption is greater at low voltages than high voltages and is typically about 250 mA at 12 V. The supply should be free of high frequency noise - if it is derived from a switching power supply, it is advisable to use a series inductor and parallel capacitors to filter it. The unit provides a regulated 5 VDC output at up to 50 mA for external use.

The probe is provided with a length of cable attached. If this length is not sufficient, an additional length may be added up to a distance of about 100 ft. However, make sure the wire gauge is adequate for the current carried – and preferably provide a separate signal ground which you should connect as close as possible to the probe, and run in parallel with the power return. Otherwise, the voltage drop due to the return current will give an offset to the output voltage. Make the connection in a suitable connection box. The cable used must be a pair of shielded twisted pairs.

Wire color	Connection
Brown	+7 to +28 VDC, 100 to 500 mA
Black	Ground/Return
White	Voltage output
Blue	+5 V, 50 mA max

Initial Test

Install the unit as desired and connect it to some form of monitoring system. Turn on the power and wait for about 5 minutes for the sensor to warm up and to stabilize.

Expose the unit to air and calibrate the monitoring system to 20.94% oxygen (or equivalent nitrogen for nitrogen purity systems). The unit should be recalibrated after about one day, and thereafter at a rate determined by usage, though once every six months month is typical.

Output Connections

The voltage output circuit is capable of driving an input resistance of 10K Ohms or more. Lower input resistances will degrade the accuracy of the circuit.

Sample Connection

The probe is provided with two barbed fittings. These are mounted into 1/8” NPT female orifices, and so may be removed and appropriate compression fittings used instead. It may be desirable to provide a tee in the line for calibration - see the discussion below. Sample flow rate should be between 0.1 SCFH and 10 SCFH, the exact amount not being critical. Avoid back-pressuring the sensor with excess flow if there is any restriction on the exhaust.

Sensor Installation

The sensor is permanently mounted in the probe and does not require separate installation.

Installation Notes

The unit is designed to be mounted on a suitable clip in a general-purpose area. It is not suitable for installation in a hazardous area though it may be mounted outdoors if the temperature range does not exceed the 14°F to 122°F (–10°C to 50°C) for which it is rated. The cable supplied is approximately 6 ft Do not mount it close to sources of electrical interference such as large transformers, motor start contactors, relays etc. Also avoid subjecting it to significant vibration. Make sure that the sensor cable does not run next to high-current cables, or AC cables. Preferably the sensor cable should be in its own conduit.

If used as an area monitor the probe should be mounted where it will sense a representative sample of the room air. If the room has no natural circulation, you may want to install a fan to make sure that there is some air movement. The nature of the possible asphyxiating gas also should affect its placement - if the danger is from a heavy gas such as CO_2, the sensor should be mounted low down so that it detects the gas before people start breathing it, while if the gas is light such as helium, the sensor should be mounted higher. Otherwise, it should normally be mounted at head height.

DO NOT USE THIS PROBE WITH HALOGEN CONTAINING GASES SUCH AS FREONS!

Operation

Calibration

The sensor will stabilize within a few minutes, and the probe may be calibrated almost as soon as it has been installed.

No provision is made in the probe itself for calibration. It is expected that the monitoring device will perform this function. The output of the sensor will be very close to 2.09 V on air and may not need further calibration. The following is intended to provide tips on performing calibration, if necessary.

Be absolutely sure that you are using at least a certified, and preferably a primary, standard span gas supply as the span gas. Alternatively use known fresh air. So called "Manufactured air" or bottled compressed air often has an oxygen content that is significantly different from its label.

If the calibration is to be performed in software, bear in mind the following points.

1. The most common error is that the user attempts to span the system on an incorrect gas, often nitrogen. Some limitation must be made therefore in the permissible gain of the system so that this condition is detected. Typically, the gain is allowed to vary no more than 25% between calibrations. However, it is still possible for a calibration to be sufficiently in error that the system cannot be recalibrated again once it has been messed up. Therefore, it must be possible to force a calibration no matter the apparent error.

2. The calibration routine should detect excessive drift and delay calibration until the drift has stopped or abort the process if no good reading can be obtained. This might happen because of an inadequate calibration gas flow, due perhaps to an empty cylinder.
3. The calibration routine should allow at least 60 seconds for the reading to stabilize.
4. If the system performs an automatic calibration, some means of alerting the user to calibration failure must be made.

Maintenance and Troubleshooting

Maintenance

The AMI oxygen probe is maintenance free other than for periodic calibration.

Periodic Calibration

The probe should be calibrated about once every six months to obtain the best accuracy. The sensor will remain stable for several years depending on the application and then degrade at the rate of less than 1% a month if it is operated continuously. Use in a particularly aggressive environment may degrade the sensor faster: in this case calibrate more often.

Specifications and Disclaimer

Specifications

Standard ranges:

Single range: 0 - 25% (0 – 95% optional)

Sensitivity: 0.5% of full scale

Repeatability: ±1% of full scale at constant temperature

Operating temperature: 14˚F to 122˚F (-10˚C to 50˚C).

Humidity: < 85%, non-condensing

Operational conditions: Pollution degree 2, Installation category II

Drift: < ±1% of full scale in 4 weeks at constant temperature

Response times:

90% of full scale < 13 seconds

Outputs: 0 - 2.5 VDC

Power requirements: Between 7 and 28 VDC (nominally 24 VDC). Typically 250 mA at 12 V with no external draw from the 5 V supply. Current draw is higher at lower voltage and lower at higher voltage.

Dimensions: 2.15” dia x 2" high (not including fittings or leads)

Weight less than 1 lb

Disclaimer

Although every effort has been made to ensure that the AMI analyzers meet all their performance specifications, AMI takes no responsibility for any losses incurred by reason of the failure of its analyzers or associated components. AMI’s obligation is expressly limited to the analyzer itself.

In particular, the AMI analyzer is designed for operation with non-flammable samples in a general purpose, i.e. non-hazardous area. Any damage resulting from its use in a hazardous area or with flammable or explosive samples is expressly the responsibility of the user.

The AMI analyzer is not designed as a primary safety device, that is to say it is not to be used as the primary means of assuring personnel safety. In particular, it is not designed to act as a medical instrument, monitoring breathing air for correct oxygen concentration, and should not be used as such when it is the only safety device on the gas system.

Glossary of Terms

Accuracy

A loose term. In general, with analyzers when we use the word "accuracy" we really mean "repeatability", the degree to which an analyzer can repeat the same measurement reading on the same gas. All analyzers really compare the measured gas against a known standard, and the accuracy of their measurement is therefore dependent upon this standard.

Bulkhead

Refers to a method of mounting an analyzer where the back of the analyzer is mounted flush against a or wall, while the body of the analyzer extends out in front of it, like a box hung on a wall's surface rather than inset.

Electrochemical

A type of chemical reaction which produces an electrical current as part of the reaction. In this case, the oxygen sensors produce an electrical current in proportion to the amount of oxygen present at their membrane surface.

Output - voltage or current

An analog voltage or current proportional to the oxygen measurement as a percentage of range, suitable for driving a chart recorder or computer input. A current output is preferred as it is less subject to interference than a voltage signal.

Process

Refers to the sample that is supposed to be analyzed. Typically, an analyzer measures the product of a chemical or physical process, and this is generally referred to as the "Process".

Range

The operational range of measurement of the analyzer. This is set by its amplifier sensitivity. Oxygen levels higher than the full-scale range will not be measured accurately. Normally the analyzer should be measuring oxygen concentrations between 20 and 80 percent of its range.

Response

The response time of an analyzer is defined as the time taken to go from the beginning of a noticeable change to 90% of the final level. The beginning is often defined as 10% of the final level. This is also called the "t90" time. The transit time of the gas is not included in this measurement.

RFI

Radio Frequency Interference. All analog circuits are prone to interference from high level radio frequencies, and special precautions must be taken to prevent this. The quality of such design is referred to by the acronym EMC, or electromagnetic compatibility - the property of being compatible with any practical electromagnetic environment.

Span

To calibrate the upper end of the range of measurement, as opposed to the bottom end or zero. Generally, this is done by exposing the sensor to a gas of known concentration, and making the analyzer read that value.

Trace

Low levels of, in this case, oxygen. This term is used to describe unwanted levels of oxygen as a contaminant, typically in the low ppm levels.

AMI WARRANTY & SUPPORT

LIMITED WARRANTY/DISCLAIMER

The warranty period is **TWO YEARS** for the Analyzer. Any failure of material or workmanship will be repaired free of charge for that specified period from the original purchase (shipping date) of the instrument. AMI will also pay for 1-way ground shipment back to the customer.

The warranty period for the electrochemical oxygen sensor is 6 months.

The warranty period for the electrochemical H_2S sensor is 6 months.

The warranty period for the zirconium oxide sensor is 2 years.

Any indication of abuse or tampering of the instrument will void the warranty.

Receiving the Analyzer

When you receive the instrument, check the package for evidence of damage and if any is found contact the shipper. Although every effort has been made to ensure that the Analyzer meets all performance specifications, AMI takes no responsibility for any losses incurred by reason of the failure of this analyzer or associated components. AMI's obligation is expressly limited to the Analyzer itself.

EXCEPT FOR THE FOREGOING LIMITED WARRANTY, AMI MAKES NO WARRANTIES, EXPRESS, IMPLIED OR STATUTORY, AS TO THE NON-INFRINGEMENT OF THIRD-PARTY RIGHTS, MERCHANTABILITY, OR FITNESS FOR A PARTICULAR PURPOSE. IF APPICABLE LAW REQUIRES ANY WARRANTIES WITH RESPECT TO THE SYSTEM, ALL SUCH WARRANTIES ARE LIMITED IN DURATION TO TWO (2) YEARS FROM THE DATE OF DELIVERY.

LIMITATION OF LIABILITY

IN NO EVENT WILL AMI BE LIABLE TO YOU FOR ANY SPECIAL DAMAGES, INCLUDING ANY LOST PROFITS, LOST SAVINGS, OR OTHER INCIDENTAL OR CONSEQUENTIAL DAMAGES, EVEN IF THE COMPANY HAS BEEN ADVISED OF THE POSSIBILITY OF SUCH DAMAGES, OR FOR ANY CLAIM BY ANY OTHER PARTY.

LIMITATION OF REMEDIES

AMI's entire liability and your exclusive remedy under the Limited Warranty (see above) shall be the replacement of any Analyzer that is returned to the Company and does not meet the Company's Limited Warranty.

Factory Service and Support

AMI offers calibration and repair services for their analyzers. To return an analyzer to the factory for repair or calibration, please complete a Return Merchandise Authorization (RMA) Request Form at www.amio2.com/request-rma. After your form has been received and reviewed, an AMI representative will contact you by email or phone with RMA number and instructions on how to ship the unit to the AMI factory.

If you have questions about your product, please contact the AMI factory at +1.714.848.5533 or complete the online Service & Support form at www.amio2.com/quote/support.