Analytical Industries Inc

Hydrogen Sulphide Analyzers

GPR-7500 & GPR-7100

The GPR-7500 analyzer utilizes the low-power electro-chemical sensor technology to provide a cost-effective and easy to maintain online-installation hydrogen sulfide measurement in a small package. The GPR-7100 is a portable H_2S analyzer version preferably used for spot checking the process or temporary usage during servicing or commissioning of an permanent installation gas analyzer. These advanced instruments from AII are agency approved for use in flammable gas streams.





Highlights

- ATEX & UL certified variants
- Accurate to < 2% (FS) with an LDL of 0.1 ppm H_2S
- Dedicated sample handling systems are included
- Optional liquid drain system (for entrained liquids)
- 24 month typical sensor life (simple to exchange)
- Easy to use HMI for set-up, operation and field calibration

Applications

- Natural gas quality
- Biogas before and after the H_2S scrubber

Sensor technology

The electrochemical sensors for hydrogen sulphide combine small size, very good sensitivity and easy maintenance making the handling of an H_2S analyzer easy. Their main advantage is however the low power consumption which makes them perfectly suitable for battery-powered personal safety devices or portable instruments.

Like most of the toxic gas sensors Analytical Industries H_2S sensors require a small amount of oxygen to function properly and provide a signal. The output from the sensor is inherently linear, but has some cross-sensitivity to other gases, which must be accounted for when utilising the data from the analyzer.

Cross Sensitivity

Gas	Concentration	7HH	Gas	Concentration	7HH
Carbon monoxide:	300ppm	≤1.5ppm	**Hydrogen:**	10,000ppm	<5ppm
Sulphur dioxide:	5ppm	<1ppm	**Hydrogen cyanide:**	10ppm	0ppm
Nitric oxide:	35pmm	<2ppm	**Hydrogen chloride:**	5ppm	0ppm
Nitrogen dioxide:	5ppm	≤-1ppm	**Ethylene:**	100ppm	0ppm
Chlorine:	1pp	≈0.2ppm			

Analyzer features and H2S scrubber options

The analyzers are supplied as standard with an air pump for dilution of the sample (to provide the oxygen required for the measurement). Alternatively, a regulated supply of compressed air can be used instead, if convenient for the customer. A range of H_2S scrubbers are available to allow safe venting to atmosphere of the sample.



Liquid Drain

Samples (such as biogas) with entrained liquids can damage the sensor and cause analyzer and system upset. With the proprietary Analytical Industries' Liquid Drain System the problem can be easily handled. The sample gas enters the system from the top of the panel and flows down towards the sample block. The unique design allows the gas present in the sample to diffuse up to the sensor, while the unwanted liquids will flow out the vent/ drain, protecting the sensor from liquid damage.

Note: This feature may impact the response time but is comparable to other sample systems designed to remove liquid carry over. Users selecting the Liquid Drain System are effectively protecting their process and reducing the cost of ownership and maintenance costs.

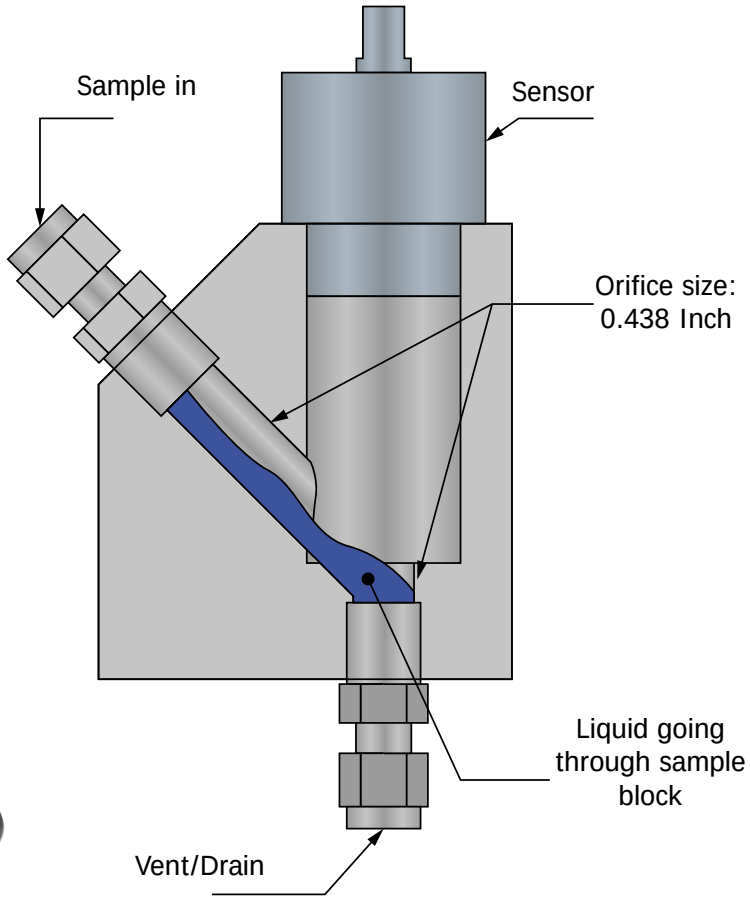

Detail view of sample Block



GPR-7100 Portable H_2S analyzer

Technical Specifications

	7100	7500 IS	7500 IS -LD	7500 AIS	7500 AIS LD	7500 AIS-S	7500 IS-S
Measurement range	0-20, 0-50, 0-100 ppm	0-20, 0-50, 0-100 ppm (standard ranges) 0-500, 0-1000, 0-2000 ppm (optional ranges)					0-20, 0-50, 0-100 ppm
Accuracy	±2% of selected range at constant conditions						
Response time	T90 < 60 seconds						
Sensitivity (LDL)	0.1 ppm						
Linearity	<2% of scale						
Sensor model	OSV-72-7HH-LM (standard ranges)	OSV-72-7HH (standard ranges), OSV-72-7HH-LD OSV-72-7H (up to 2000 ppm), OSV-72-7H-LD				OSV-72-7HH-LM (standard ranges)	
Sensor life at 25ºC (77°F) and 1 atm	24 months						
Calibration interval	1-3 months - see manual for individual models						
Inlet pressure	0.34-2 barg (5-30 psig); vent - atmospheric					atmospheric	
Sample flow rate	0.5 Nl/m (1 SCFH)					None, measures H_2S in ambient air	
Auxilary air flow rate	0.5 l/m (1 SCFH) 1.5 Nl/m (3 SCFH) for high range sensor Instrument air required: regulated to 1 barg if internal pump not supplied						
Gas connections	1/8" Compression Type Fittings	1/4" Sample/Span; 3/8" Vent line.				None	
Wetted parts	Stainless steel						
Display	Graphical LCD 7 x 3.5cm (2.75 x 1.375"); resolution 0.1 ppm						
Enclosure	Painted aluminum NEMA 4X, 10.1 x 22.9 x 7.6cm (4 x 9 x 3")	NEMA Type 3R for rain in outdoor applications				Type 3R	
Weight	3.6kg (8 lbs)	10 Kg (22 lbs)					
Signal output	0-1V	4-20 mA or 1-5 V DC					
Alarms	None			Two user configurable alarms: magnetic coil relays rated 3A at 100 V AC, programmable alarm delays, alarm bypass for calibration and system fail alarm			None
LED indicators	LOW BATT Warning; CHARGE mode	NA					
Operating temperature	-10° to 45°C (14°F to 113°F)						
Power	Rechargeable battery, 8 hours day duty cycle	18-28 V DC Transmitter, 12 V DC Pump		12-28 V DC (UL or ATEX Certified) (ATEX Certified) Transmitter, 12 V DC optional PUMP		12-28 V DC (UL or ATEX Certified) 110-220 V AC (ATEX Certified)	18-28 V DC
Area classification	ATEX: II 2 G Ex ib IIB T4 Gb T_{amb} -20°C to +45° C	UL: United States: UL 1203, UL 913, UL 508					
		ATEX: ATEX: II 2 G Ex ib IIB T4 Gb T_{amb} -20°C to +50°C					

Analytical Industries Inc. 2855 Metropolitan Place, Pomona, CA 91767 USA
Tel: 909-392-6900, Fax: 909-392-3665, www.aii1.com, e-mail: info@aii1.com

Please note: Analytical Industries Inc. adopts a continuous development program which sometimes necessitates specification changes without notice. Please contact us for the latest version. Issue No: Hydrogen Sulphide Analyzers_partnumber_V2_US_1018