EC9031

INDUSTRIAL PHYSICS

SYSTECH illinois

EC9031 Oxygen Monitor

Simple and reliable dual alarm ambient oxygen monitor

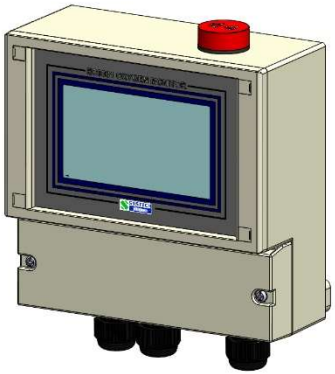

User installation, operating and maintenance instructions

Issue 1.10
August 2021

0501-0007

Contents

Safety information 5

Setting up the EC9031 10

Unpacking 10

EC9031 Overview 11

Introduction 12

Oxygen Sensor Operation 12

General Overview 13

Installation 17

Location 17

Mounting of EC9031 Oxygen Monitor 17

Mounting of Oxygen Sensor Assembly 18

Cabling requirements 18

Electrical relay connections for external visible / audible alarms 19

Prepare the EC9031 for first time use 21

Set Date and Time 21

Set Alarms and Alarm Relay Test 22

Oxygen Sensor Calibration 22

Relative Humidity Compensation 23

Fault Relay Test 24

PIN Change 24

In the event of an Alarm 25

Alarm 1 level is activated 25

Alarm 2 level is activated 26

Additional Alarm Settings 26

EC9031 Log menu 27

Service and maintenance 29

Updating firmware 30

Firmware version 30

Connecting the RS485 lead 30

Install the EC9031 Firmware Update software 31

Recovery mode 33

Identifying COM Port Number 33

Accessories 34

Specification 35

Warranty 36

Limitation of Warranty 36

EU Declaration of Conformity 38

Safety information

EN

Warning: Installation must be carried out by suitably trained personnel and in accordance with the recognized standards of the appropriate authority in the country concerned. Ensure local regulations and site procedures are followed during installation and use.

Safety information

- Check the EC9031 Oxygen Monitor, Oxygen Sensor, and accessories for damage prior to use.
- Check the cables and cable glands are secure on the EC9031 Oxygen Monitor.
- Read and understand all warnings and instructions in this manual prior to installation and use.
- Periodically inspect the EC9031 Oxygen Monitor and Oxygen Sensor for damage. Check the cables are secure in position and cable insulation is not damaged in any way.
- The EC9031 Oxygen Monitor must be installed, operated, and maintained in strict accordance with these instructions, warnings and within the limitations stated.
- Maintenance and calibration operations must only be carried out by qualified service personnel.
- There are no user serviceable parts inside the EC9031 Oxygen Monitor.
- The EC9031 Oxygen Monitor and Oxygen Sensor should be protected from mechanical stress such as knocks, strong vibration and installed away from direct sunlight and sources of heat. Avoid contact with volatile organic chemicals such as acetone.
- The Oxygen Sensor consumes a small amount of oxygen during the detection process. The sensor should be installed in a work area with good airflow.
- The Oxygen Sensor contains small volume of corrosive electrolyte. Care should be taken with any leakage to ensure the electrolyte does not come into contact with skin or eyes, and is not swallowed or breathed in. Flush contact areas generously with water and seek immediate medical assistance.
- The Oxygen Monitor is powered by a stabilised 5V, 2A power source. Electrical connections must only be carried out by qualified personnel.
- Do not fit the mains power adaptor into a damaged mains outlet socket.
- The Oxygen Monitor and Oxygen Sensor are designed to function safely when in an ambient temperature between +5ºC to +45ºC.

FR

Avertissement : L'installation doit être effectuée par du personnel ayant reçu une formation adéquate et en conformité avec les normes reconnues de l'autorité compétente du pays concerné. S'assurer que les réglementations locales et les procédures du site sont respectées pendant l'installation et l'utilisation.

Informations relatives à la sécurité

- Avant toute utilisation, vérifier que le moniteur d'oxygène EC9031, le capteur d'oxygène et les accessoires ne sont pas endommagés.
- Vérifier que les câbles et les presse-étoupes sont bien fixés sur le moniteur d'oxygène EC9031.
- Lire et comprendre tous les avertissements et instructions de ce manuel avant l'installation et toute utilisation.
- Inspecter régulièrement le moniteur d'oxygène EC9031 et le capteur d'oxygène pour vérifier qu'ils ne sont pas endommagés. Vérifier que les câbles sont bien fixés en position et que l'isolation des câbles n'est pas endommagée de quelque manière que ce soit.
- L'installation, l'utilisation et la maintenance du moniteur d'oxygène EC9031 doivent impérativement respecter les instructions, les avertissements et les limites indiquées.
- Les interventions de maintenance et de calibrage doivent être confiées uniquement à un personnel d'entretien qualifié.
- Le moniteur d'oxygène EC9031 ne contient aucune pièce réparable par l'utilisateur.
- Le moniteur d'oxygène et le capteur d'oxygène EC9031 doivent être protégés des contraintes mécaniques telles que les coups, les fortes vibrations et être installés à l'abri de la lumière directe du soleil et des sources de chaleur. Éviter tout contact avec des produits chimiques organiques volatils tels que l'acétone.
- Le capteur d'oxygène consomme une petite quantité d'oxygène pendant le processus de détection. Le capteur doit être installé dans une zone de travail bien ventilée.
- Le capteur d'oxygène contient un petit volume d'électrolyte corrosif. En cas de fuite, s'assurer que l'électrolyte n'entre pas en contact avec la peau ou les yeux, qu'il n'est pas avalé ou inhalé. Rincer abondamment les zones de contact à l'eau claire et demander une assistance médicale immédiate.
- Le moniteur d'oxygène est alimenté par une source d'alimentation stabilisée de 5 V, 2 A. Les connexions électriques ne doivent être effectuées que par du personnel qualifié.
- Ne pas brancher l'adaptateur secteur dans une prise de courant endommagée.
- Le moniteur d'oxygène et le capteur d'oxygène sont conçus pour fonctionner en toute sécurité lorsque la température ambiante est comprise entre +5 °C et +45 °C.

DE

Warnung: Die Installation muss von entsprechend ausgebildetem Personal in Übereinstimmung mit den anerkannten Normen der entsprechenden Behörde in dem jeweiligen Land erfolgen. Stellen Sie sicher, dass bei der Installation und Verwendung die lokalen Vorschriften und Betriebsverfahren eingehalten werden.

Sicherheitshinweise

- Überprüfen Sie den EC9031 Sauerstoffmonitor, den Sauerstoffsensor und das Zubehör vor der Verwendung auf Schäden.
- Vergewissern Sie sich, dass die Kabel und Kabelverschraubungen fest am EC9031 Sauerstoffmonitor angebracht sind.
- Bitte lesen und befolgen Sie vor der Installation und Verwendung alle Warnhinweise und Anweisungen in diesem Handbuch.
- Untersuchen Sie den EC9031 Sauerstoffmonitor und den Sauerstoffsensor regelmäßig auf Schäden. Vergewissern Sie sich, dass die Kabel richtig angeschlossen sind und die Kabelisolierung nicht beschädigt ist.
- Der EC9031 Sauerstoffmonitor muss streng in Übereinstimmung mit diesen Anweisungen und Warnhinweisen sowie innerhalb der genannten Grenzwerte installiert, betrieben und gewartet werden.
- Wartungs- und Kalibrierarbeiten dürfen nur von qualifiziertem Wartungspersonal durchgeführt werden.
- Der EC9031 Sauerstoffmonitor enthält keine vom Benutzer wartbaren Teile.
- Der EC9031 Sauerstoffmonitor und der Sauerstoffsensor sollten vor mechanischer Beanspruchung wie Schlägen oder starken Vibrationen geschützt und abseits von direkter Sonneneinstrahlung und Wärmequellen installiert werden. Vermeiden Sie den Kontakt mit flüchtigen organischen Chemikalien wie Aceton.
- Der Sauerstoffsensor verbraucht während des Detektionsvorgangs eine kleine Menge Sauerstoff. Der Sensor sollte in einem Arbeitsbereich mit guter Luftzirkulation installiert werden.
- Der Sauerstoffsensor enthält eine kleine Menge eines korrosiven Elektrolyten. Bei Undichtheit sollte darauf geachtet werden, dass der Elektrolyt nicht in Kontakt mit der Haut oder den Augen kommt bzw. nicht verschluckt

oder eingeatmet wird. Die Kontaktbereiche großzügig mit reinem Wasser abspülen und umgehend einen Arzt konsultieren.

- Der Sauerstoffmonitor wird mit einer Konstantstromquelle von 5 V und 2 A betrieben. Elektrische Anschlüsse dürfen nur von einer Fachkraft vorgenommen werden.
- Schließen Sie das Netzteil nicht an eine beschädigte Steckdose an.
- Der Sauerstoffmonitor und Sauerstoffsensor wurden für den sicheren Betrieb bei Umgebungstemperaturen zwischen +5 °C und +45 °C entwickelt..

IT

Avvertimento: L'installazione deve essere eseguita da personale qualificato e secondo gli standard riconosciuti dell'autorità preposta nel Paese interessato. Assicurarsi che siano rispettate le normative locale e le procedure del sito durante l'installazione e l'uso..

Informazioni sulla sicurezza

- Prima dell'uso, controllare che il monitor per l'ossigeno EC9031, il sensore di ossigeno e gli accessori non siano danneggiati.
- Controllare che i cavi e i pressacavi siano fissati sul monitor per l'ossigeno EC9031.
- Prima dell'installazione e dell'uso, leggere e comprendere tutte le avvertenze e le istruzioni contenute in questo manuale.
- Ispezionare periodicamente il monitor per l'ossigeno EC9031 e il sensore di ossigeno per controllare che non siano danneggiati. Controllare che i cavi siano fissati in posizione e che l'isolamento dei cavi non sia danneggiato in alcun modo.
- Il monitor per l'ossigeno EC9031 deve essere installato, azionato e manutenuto osservando rigorosamente queste istruzioni e le avvertenze ed entro i limiti indicati.
- Le operazioni di manutenzione e calibrazione devono essere eseguite solo da personale di assistenza qualificato.
- All'interno del monitor per l'ossigeno EC9031 non ci sono componenti riparabili dall'utente.
- Il monitor per l'ossigeno EC9031 e il sensore di ossigeno devono essere protetti da sollecitazioni meccaniche come urti e forti vibrazioni e installati lontano dalla luce solare diretta e da fonti di calore. Evitare il contatto con sostanze chimiche organiche volatili come l'acetone.
- Il sensore di ossigeno consuma una piccola quantità di ossigeno durante il processo di rilevamento. Il sensore deve essere installato in un'area di lavoro con una buona ventilazione.
- Il sensore di ossigeno contiene una piccola quantità di elettrolito corrosivo. Fare attenzione in caso di perdite, per assicurarsi che l'elettrolito non entri a contatto con la pelle o gli occhi, non venga ingerito o inalato. Sciacquare abbondantemente le aree di contatto con semplice acqua e consultare immediatamente un medico.
- Il monitor per l'ossigeno è alimentato da una sorgente di alimentazione da 5 V, 2 A. I collegamenti elettrici devono essere eseguiti solo da personale qualificato.
- Non inserire l'adattatore in una presa di corrente danneggiata.
- Il monitor per l'ossigeno e il sensore di ossigeno sono progettati per funzionare in modo sicuro a una temperatura ambiente compresa tra +5 °C a +45 °C.

ES

Advertencia: La instalación deberá ser efectuada por personal debidamente capacitado y de conformidad con los estándares reconocidos por la autoridad competente del país en cuestión. Observe los reglamentos locales y los procedimientos del emplazamiento durante la instalación y el uso.

Información sobre seguridad

- Compruebe que ni el monitor de oxígeno y sensor de oxígeno EC9031 ni sus accesorios se encuentren dañados antes de usarlos.
- Compruebe que los cables y los prensaestopas de los cables estén firmemente fijados al monitor de oxígeno EC9031.
- Lea detenidamente todas las instrucciones y advertencias contenidas en este manual antes de proceder con la instalación y el uso.
- Inspeccione de forma periódica el monitor de oxígeno y sensor de oxígeno EC9031. Asegúrese de que los cables estén firmemente fijados en su posición y que su aislamiento no se encuentre dañado en modo alguno.
- El monitor de oxígeno EC9031 debe instalarse, utilizarse y mantenerse estrictamente de conformidad con estas instrucciones y advertencias, y dentro de las limitaciones indicadas.
- Las operaciones de mantenimiento y calibración serán llevadas a cabo exclusivamente por personal técnico

cualificado.

- El interior del monitor de oxígeno EC9031 no contiene piezas cuyo mantenimiento pueda llevar a cabo el usuario.
- El monitor de oxígeno y sensor de oxígeno EC9031 debe mantenerse protegido de tensiones mecánicas como, por ejemplo, impactos o fuertes vibraciones, e instalarse alejado de la luz solar directa y de fuentes de calor. Evite el contacto con compuestos orgánicos volátiles como la acetona.
- El sensor de oxígeno consume una pequeña cantidad de oxígeno durante el proceso de detección. El sensor debe instalarse en espacios de trabajo que dispongan de una buena circulación de aire.
- El sensor de oxígeno contiene un pequeño volumen de electrolito corrosivo. En caso de producirse una fuga, evite que el electrolito entre en contacto con la piel o los ojos, o se trague o ingiera. Enjuague abundantemente con agua corriente las áreas afectadas y busque asistencia médica de inmediato.
- El monitor de oxígeno se alimenta mediante una fuente estabilizada de 5 V y 2 A. Cualquier conexión eléctrica deberá ser llevada a cabo exclusivamente por personal cualificado.
- No conecte el adaptador de alimentación a una toma de red dañada.
- El monitor de oxígeno y sensor de oxígeno está diseñado para funcionar de manera segura con una temperatura ambiente de entre 5 °C y 45 °C.

NL

Waarschuwing: De installatie moet worden uitgevoerd door goed opgeleid personeel, conform de erkende normen van de bevoegde autoriteit in het betrokken land. Zorg ervoor dat de lokale wet- en regelgeving en de bedrijfsprocedures worden opgevolgd tijdens de installatie en het gebruik.

Veiligheidsinformatie

- Controleer de zuurstofmonitor EC9031, de zuurstofsensor en de accessoires op beschadigingen voorafgaand aan het gebruik.
- Controleer of de kabels en de kabelpakkingen van de EC9031 zuurstofmonitor goed zijn bevestigd.
- Lees en begrijp alle waarschuwingen en instructies in deze handleiding voorafgaand aan het gebruik.
- Inspecteer de EC9031 zuurstofmonitor en zuurstofsensor regelmatig op beschadigingen. Controleer of de kabels goed zijn bevestigd en zorg ervoor dat de kabelisolatie op geen enkele manier beschadigd is.
- De EC9031 zuurstofmonitor moet geïnstalleerd, bediend en onderhouden worden in strikte overeenstemming met deze instructies, waarschuwingen en binnen de vermelde beperkingen.
- Alle onderhouds- en kalibratiewerkzaamheden mogen alleen worden uitgevoerd door vakbekwaam onderhoudspersoneel.
- De EC9031 zuurstofmonitor bevat geen onderdelen die door de gebruiker onderhouden hoeven te worden.
- De EC9031 zuurstofmonitor en zuurstofsensor moeten worden beschermd tegen stoten, sterke trillingen en andere mechanische belasting. Installeer deze apparatuur uit de buurt van direct zonlicht en warmtebronnen. Vermijd contact met vluchtige organische chemicaliën zoals aceton.
- De zuurstofsensor verbruikt tijdens het detectieproces een kleine hoeveelheid zuurstof. De sensor moet worden geïnstalleerd in een werkomgeving met een goede ventilatie.
- De zuurstofsensor bevat een kleine hoeveelheid corrosieve elektrolyt. Zorg ervoor dat er geen gelekte elektrolyt in contact komt met de huid of ogen of ingeslikt of ingeademd wordt. Spoel de contactgebieden met een ruime hoeveelheid schoon water en raadpleeg onmiddellijk een arts.
- De zuurstofmonitor heeft een gestabiliseerde voedingsbron van 5 V, 2 A. De elektrische aansluitingen mogen alleen tot stand worden gebracht door vakbekwaam personeel.
- Steek de stekker nooit in een beschadigd stopcontact.
- De zuurstofmonitor en de zuurstofsensor zijn ontworpen voor een veilige werking in een omgevingstemperatuur van 5 tot 45ºC.

PT

Advertência: a instalação deve ser efetuada por pessoal com formação adequada e de acordo com as normas reconhecidas da autoridade apropriada do país em questão. A instalação e a utilização deverão ser executadas em conformidade com os regulamentos e os procedimentos locais.

Informações de segurança

- Antes da utilização, verificar o EC9031 Monitor de Oxigénio, o Sensor de Oxigénio e os respetivos acessórios quanto a danos.
- Verificar a ligação dos cabos e dos bucins ao EC9031 Monitor de Oxigénio.
- Antes da instalação e utilização, ler e compreender todos os avisos e instruções contidos neste manual.

- Inspecionar periodicamente o EC9031 Monitor de Oxigénio e o Sensor de Oxigénio quanto à existência de danos. Certificar que os cabos estão seguros em posição e que o isolamento dos cabos não apresenta danos.
- O EC9031 Monitor de Oxigénio deve ser instalado, operado e mantido em estrita conformidade com estas instruções e advertências e dentro das limitações indicadas.
- As operações de manutenção e calibração só devem ser efetuadas por pessoal de assistência devidamente qualificado.
- O EC9031 Monitor de Oxigénio não contém peças reparáveis pelo utilizador.
- O EC9031 Monitor de Oxigénio e o Sensor de Oxigénio devem ser protegidos de tensões mecânicas, tais como pancadas ou vibrações fortes, e deverão ser instalados longe da luz solar direta e de fontes de calor. Evitar o contacto com substâncias químicas orgânicas voláteis, como a acetona.
- O Sensor de Oxigénio consome uma pequena quantidade de oxigénio durante o processo de deteção. O sensor deve ser instalado numa área de trabalho com boa circulação de ar.
- O Sensor de Oxigénio contém uma pequena quantidade de eletrólito corrosivo. É necessário ter cuidado com possíveis fugas para assegurar que o eletrólito não entra em contacto com a pele ou os olhos, nem é engolido ou inalado. Lavar as áreas de contacto com água limpa abundante e procurar assistência médica de imediato.
- O Monitor de Oxigénio é alimentado por uma fonte de alimentação estabilizada de 5V e 2A. As ligações elétricas só devem ser efetuadas por pessoal devidamente qualificado.
- Não ligar o transformador de corrente a uma tomada elétrica danificada.
- O Monitor de Oxigénio e o Sensor de Oxigénio foram concebidos para funcionar em segurança a uma temperatura ambiente entre 5 °C e 45 °C.

PO

Ostrzeżenie: Instalacja musi być przeprowadzona przez odpowiednio przeszkolony personel oraz zgodnie z obowiązującymi standardami wydanymi przez właściwe organy w danym kraju. Upewnić się, że podczas instalacji i użytkowania przestrzegane są lokalne przepisy i procedury obowiązujące w danym miejscu.

Informacje dotyczące bezpieczeństwa

- Przed użyciem sprawdzić analizator tlenu EC9031, czujnik tlenu i akcesoria pod kątem uszkodzeń.
- Sprawdzić, czy przewody i dławiki kablowe w analizatorze tlenu EC9031 są dobrze zamocowane.
- Przed przystąpieniem do instalacji i użytkowania należy dokładnie zapoznać się z wszystkimi ostrzeżeniami i instrukcjami zawartymi w tym przewodniku.
- Należy okresowo sprawdzać analizator tlenu EC9031 i czujnik tlenu pod kątem uszkodzeń. Sprawdzić, czy przewody są dobrze zamocowane oraz czy ich izolacja nie jest w żaden sposób uszkodzona.
- Analizator tlenu EC9031 musi być instalowany, obsługiwany i konserwowany zgodnie z instrukcjami i ostrzeżeniami oraz w zgodzie z ustalonymi ograniczeniami.
- Prace konserwacyjne i kalibracje mogą być wykonywane wyłącznie przez wykwalifikowany personel.
- Analizator tlenu EC9031 nie zawiera żadnych części przeznaczonych do samodzielnego serwisowania.
- Analizator tlenu EC9031 i czujnik tlenu należy chronić przed obciążeniami mechanicznymi, takimi jak uderzenia i silne wibracje, oraz instalować z dala od bezpośredniego światła słonecznego i źródeł ciepła. Unikać kontaktu z lotnymi związkami organicznymi takimi jak aceton.
- Podczas wykrywania tlenu czujnik zużywa niewielką jego ilość. Czujnik należy instalować w miejscu o dobrym przepływie powietrza.
- Czujnik tlenu zawiera niewielką ilość elektrolitu o działaniu korozyjnym. W przypadku wycieku należy zachować ostrożność, aby nie dopuścić do kontaktu elektrolitu ze skórą lub oczami, jego połknięcia lub przedostania się do dróg oddechowych. Miejsca kontaktu z elektrolitem należy obficie spłukać czystą wodą i niezwłocznie zwrócić się o pomoc medyczną.
- Analizator tlenu jest zasilany ze stabilnego źródła 5 V, 2 A. Połączenia elektryczne może wykonywać wyłącznie wykwalifikowany personel.
- Zasilacza sieciowego nie wolno podłączać do uszkodzonego gniazda.
- Analizator tlenu i czujnik tlenu zostały zaprojektowane tak, aby działały bezpiecznie w temperaturze otoczenia od +5ºC do +45ºC.

Setting up the EC9031

Please read the instructions carefully before installation and use.

Unpacking

Remove the EC9031 from the packaging. The accessories are in the top of the box. Check the contents are complete, you should have:



EC9031 Oxygen Monitor



Remote Oxygen Sensor Assembly



Quick start guide



Memory stick (part number 0512-0006) containing:
The user manual and firmware update software

Separate pack for options



Oxygen Sensor mounting bracket



PSU



RS485 lead



30m Coax Cable 9 way D socket to terminated end (sensor signal to EC9031)

27m Coax Cable 9 way D plug to BNC free plug (EC9031 to Oxygen Sensor assembly)

EC9031 Overview

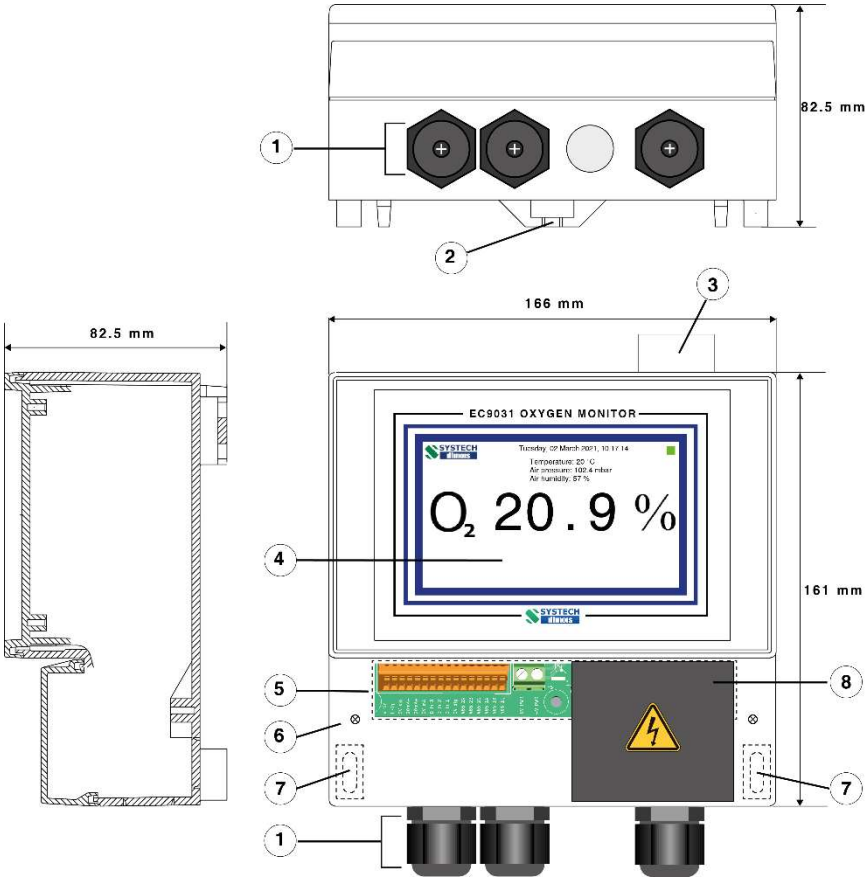

1. Cable entry glands: 3 x M 16, 1 blank
2. Wall mount
3. Alarm light and sounder
4. Touchscreen display and operator panel
5. Terminal strip
6. Cover for main terminal strip and mounting holes
7. Mounting holes / screws
8. Cover for relay terminals

Figure 1: EC9031 dimensions and overview

Introduction

The EC9031 is an IP65 touchscreen oxygen monitor with a remote electrochemical oxygen sensor, wiring panel, and alarm features. It measures the ambient air temperature, pressure, and humidity to compensate for changes in environmental conditions.

There are two alarm levels for monitoring changes in ambient oxygen levels, a red-light beacon on top of the unit and a high-volume audible sounder. All electrical connections are made via the terminal strip mounted under the cover (6). Two optional alarm relays and one fault relay are available to connect with external light beacons and audible sounders. The EC9031 is simple to use with easy sensor replacement and calibration in air.

A logging system records events for later analysis.

Oxygen Sensor Operation

The oxygen sensor contains an anode, electrolyte, and an air cathode to which the diffusion of oxygen is limited by a diffusion barrier. At the air cathode oxygen is reduced to hydroxyl ions which in turn oxidise the metal anode.

The following reaction takes place at the cathode:

$$O_2 + 4H^+ + 4e^- \rightarrow 2H_2O$$

and at anode:

$$2Pb + 2H_2O \rightarrow 2PbO + 4H^+ + 4e^-$$

and the complete chemical reaction is represented by:

$$O_2 + 2Pb \rightarrow 2PbO$$

General Overview

Icons

Navigation icons			
	Return to previous screen		Up / Increase icon
	OK icon, accept changes		Down / Decrease icon
Main Menu Admin Date & Time			Menu breadcrumb

Menu icons			
	Oxygen Monitor is in run mode	101	Oxygen Monitor is sending or receiving data through a serial port
	System Info		Calibrate
	Admin Settings		Factory Settings
	Date and Time		Log
	Alarm 1		PIN Change
	Alarm 2		Fault Relay Test
	Alarm Test		Cancel Alarm
	Alarm latching		Alarm non-latching
	Relative humidity compensation		

User Interface

The EC9031 Oxygen Monitor has a 4.3 inch full colour touchscreen display and easy to follow menu. The monitor's functions are accessed via icon buttons.

In normal running mode the oxygen reading is displayed, see Figure 2.

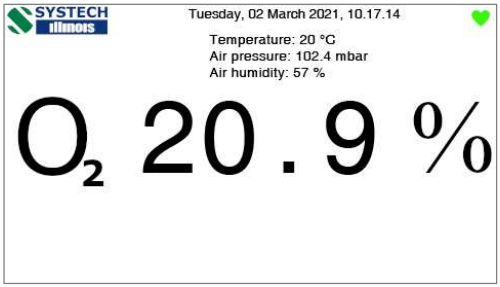

Figure 2: Home screen

To access the *Calibration*, *Log* and *Admin* menus press the touchscreen to go to the *Main Menu*.

Menu system overview

To access the menus system, press the touchscreen. The *Main Menu* screen is shown in Figure 3, *Admin* screen in Figure 4 and the Menu structure in Figure 5.

Press the *Admin* icon to access the *Admin* screen. 

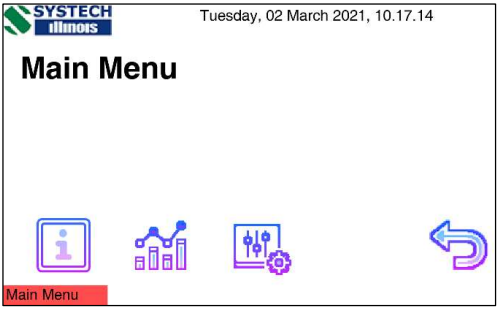

Figure 3: Main Menu

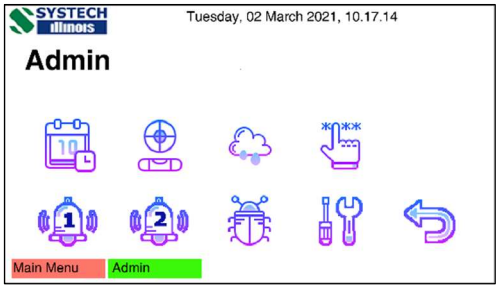

Figure 4: Admin screen

The menu structure is shown in Figure 5.

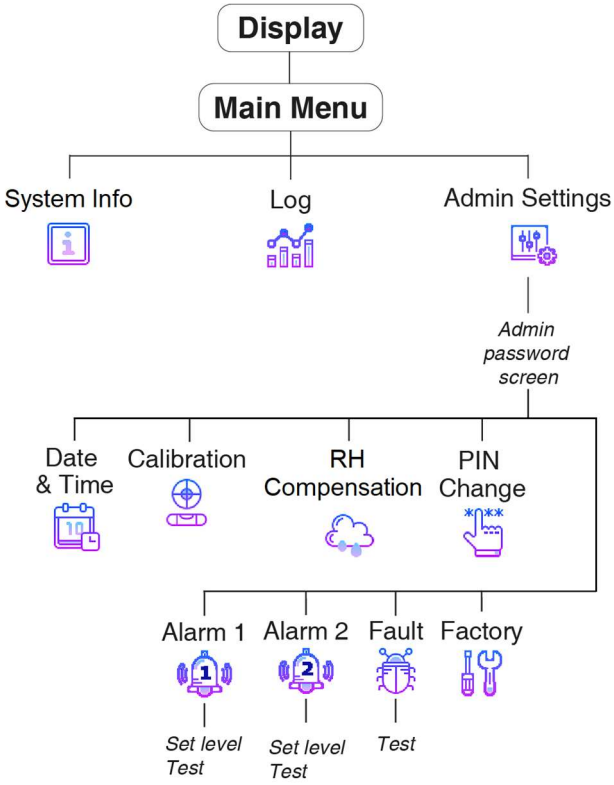

Figure 5: Menu structure

Installation

Available items:

- EC9031 Oxygen Monitor
- Oxygen Sensor Assembly (PN 096 010) with optional wall Bracket Accessory Kit (PN 090 256).
- Coax cable: 27 metre length, 9 way D plug to BNC (EC9031 to Oxygen Sensor assembly, PN 096 015).
  Optional custom length available, maximum length 100m.
- Coax cable: 30 metre length, 9 way D socket to terminated end (sensor signal to EC9031, PN 0023-0063)
- PSU (PN 0032-0005)

Location

Before carrying out any installation work, ensure that local regulations and site procedures are followed.

EC9031 Oxygen Monitor

The EC9031 Oxygen Monitor is IP65 rated and designed to be wall mounted. Keep away from sources of heat (such as a radiator) and direct sunlight.

Oxygen Sensor

Keep the Oxygen Sensor away from sources of heat such as direct sunlight.

Mounting of EC9031 Oxygen Monitor

Mount the EC9031 Oxygen Monitor at a convenient height to view the display on a wall near an existing mains supply or create a supply to connect to the optional PSU (PN 0032-0005). Fixing holes are located beneath the terminal cover, shown in Figure 1 (7).

An optional Bracket Accessory Kit (PN 0106-0005) is available (use 5mm maximum diameter screws).

Consider ease of access and for servicing.

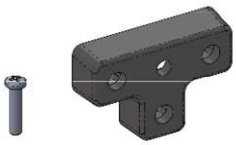

Mounting of Oxygen Sensor Assembly

The Oxygen Sensor Assembly should be mounted in a work area in clean air with good airflow. Consider natural and forced air currents. A Remote Sensor Bracket is available (PN 090 256).
Note: The Oxygen Sensor should not be installed in an area with no or very limited airflow such as an enclosed space.

Mount the Oxygen Sensor in a horizontal or vertical position with the air hole pointing toward the floor. Avoid installing the Oxygen Sensor pointing upwards.

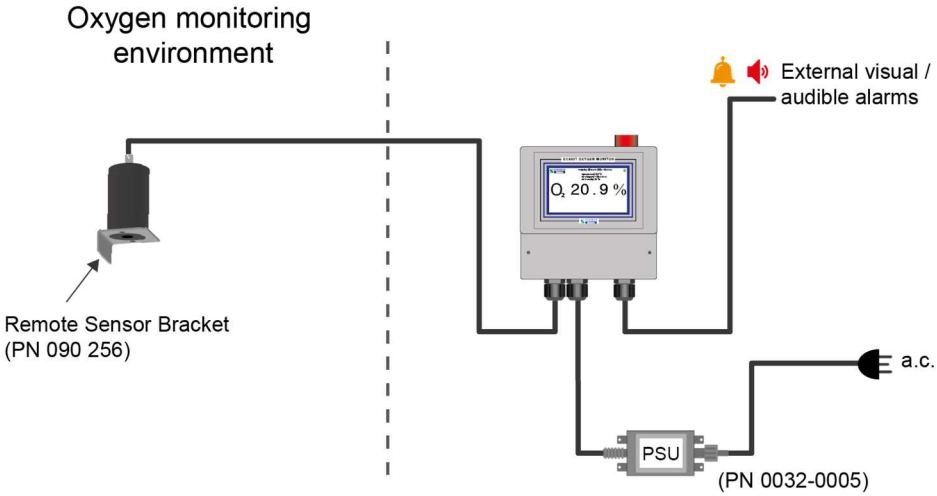

Cabling requirements

Cabling requirements are shown in Figure 6. The terminal strip is located inside the housing, under the safety cover.

Power supply

The EC9031 Oxygen Monitor is operated from a 5V DC 2A supply. An optional AC line power 85-264V, 50-60Hz to 5V 2A PSU is available (PN 0032-0005). Power is connected to the 3-way terminal strip as shown in Figure 6.

Oxygen Sensor Assembly

The Oxygen Sensor Assembly is connected to the ‘V Sig’ and ‘0V Sig’ as shown in Figure 6.

Optional RS485

The EC9031 Oxygen Monitor firmware has an RS485 interface for updating the firmware. To use the optional USB to the RS485 Serial Converter (PN 0804-0001), connect the orange wire (A) to the '485 1A', the yellow wire (B) to '485 1B' and the black wire (G) to '485 1G' as shown in Figure 6.

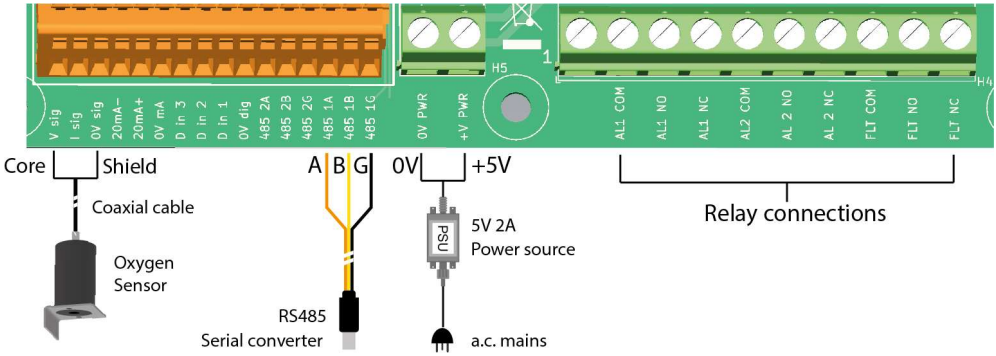

Figure 6: Cabling

Electrical relay connections for external visible / audible alarms

The EC9031 Oxygen Monitor can be wired through the Relay connections to external visible / audible alarms or motor driven equipment such as a fan. Refer to the Status Indication table below. Electrical connections are shown in Figure 7.

Status Indication

Normal operation	O_2 20.9 % Green run mode icon flashing	Alarm 1 OFF Alarm 2 OFF
Alarm 1	O_2 reading below alarm 1 limit (default 20%)	Alarm 1 ON, Red light beacon ON Sounder ON, Alarm 1 Relay ON
Alarm 2	O_2 reading below alarm 2 limit (default 18%)	Alarm 2 ON, Red light beacon ON (Flashing) Sounder ON Alarm 2 Relay ON
Alarm 1 relay	Normally de-activated, activating on alarm	Contact normally open (NO) closing on alarm
Alarm 2 relay	Normally de activated, activating on alarm	Contact normally open (NO) closing on alarm
Fault relay	Normally activated, de-activating on fault	Contact normally closed (NC) opening on fault

The relay terminals are located on the right side of the terminal strip, under the black safety cover, see Figure 1.

WARNING: The relay connections may be connected to a 250V power source. Ensure local regulations and site procedures are followed during installation.

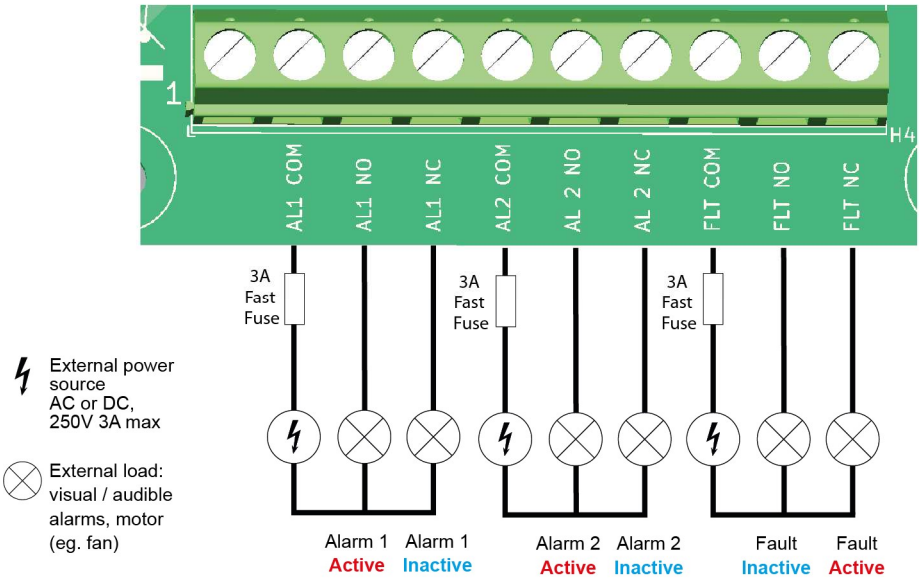

Figure 7: Relay connections

Power on

The EC9031 is now ready to power on. The following section describes the initial setup procedure.

Prepare the EC9031 for first time use

The EC9031 measures the ambient air temperature, pressure and humidity to compensate for changes in environmental conditions. After initial power on, for best accuracy, allow 30 minutes warm up time.

The following instructions require access to the EC9031 *Admin* menu. Press the touchscreen to display the *Main Menu* followed by pressing the *Admin* icon .



The *Admin PIN* screen is displayed.

Enter the default PIN '1234' and press the *OK* icon .

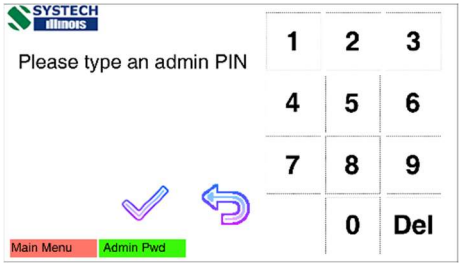

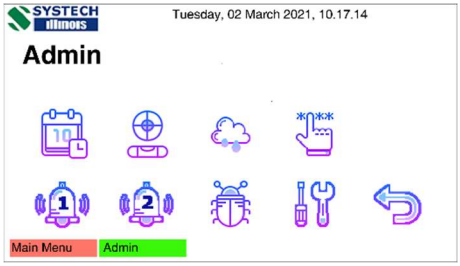

Note: The PIN number can be changed, see section 'PIN Change'.

Set Date and Time

On the *Admin* menu press the *Date and Time* icon .

Select a date or time field and use the *Up* and *Down* icons to adjust the value. Press the *OK* icon to complete changes.

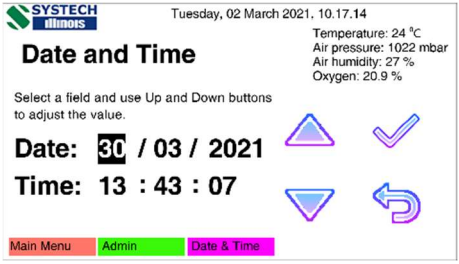

Set Alarms and Alarm Relay Test

Alarms are pre-set to default trigger levels. Alarm 1 is set to 20% and Alarm 2 is set to 18%.

Adjust Alarm Trigger Level

To adjust the Alarm trigger level, press the *Alarm* icon to display the *Alarm 1* screen. Use the *Up* and *Down* icons to adjust the trigger level.

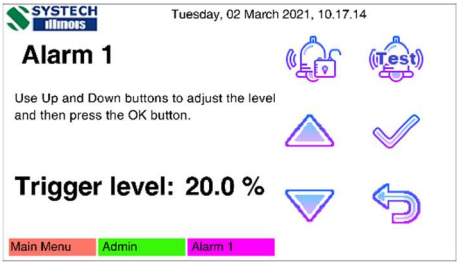

Press the *OK* icon to complete changes.

Alarm Relay Test

Press the *Alarm Test* icon to test the EC9031 alarms and/or external visible / audible relay alarms. To stop the test, press the *Alarm Test* icon again.

Return to the *Admin* menu and repeat for Alarm 2 as required.

Oxygen Sensor Calibration

Ensure the Oxygen Sensor is in clean air with good airflow.

The oxygen sensor calibration is calculated at two points, the 'Zero' point and a second point at the correct oxygen value. The EC9031 performs the complete calibration in one step.

From the *Admin* menu press the *Calibration* icon. The *O2 Sensor Calibration* screen is displayed.

Press the *OK* icon to start calibration.



The display will show the progress of calibration. When calibration is complete the message ‘Calibration OK’ will be displayed.

Press the *OK* icon to save settings.

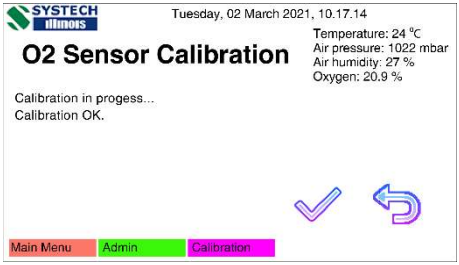

Relative Humidity Compensation

Water vapor in the air displaces other gases, including oxygen. As the amount of water vapor increases, the proportion of oxygen to other gases without water vapor remains the same, but the proportion of oxygen in the full mixture including water vapor is reduced.

The EC9031 provides an option to compensate for this effect. From the *Admin* menu press the *‘Rain Cloud’* icon to enter the *RH Compensation* screen.

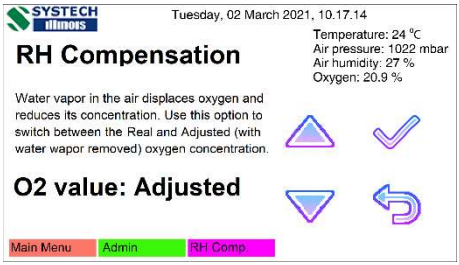

Use the *Up* and *Down* icons to change the setting between *‘Real’* and *‘Adjusted’*. Press the *OK* icon to complete changes.

When switched to ‘Adjusted’, the EC9031 uses the current temperature and relative humidity to calculate the absolute humidity, then adjusts the oxygen reading to a theoretical value with all water vapour removed.

Please note that Industrial Physics recommends using the *‘Real’* option due to ‘*Adjusted’* giving inflated oxygen concentration values.

Note that all alarms are triggered by the oxygen value displayed and are thus affected by this setting.

Fault Relay Test

The EC9031 provides a Fault Relay Test to verify the external connected fault visible / audible alarms are working correctly.

From the *Admin* menu press the *'Bug'* icon. The *Fault Relay Test* screen is displayed.

Press the *'Bug'* icon for at least 2 seconds to activate the Fault Relay Test.

To stop the test, press the *'Bug'* icon again.



PIN Change

The *Admin PIN* can be changed from the default '1234' to a new one.

From the *Admin* menu press the *PIN Change* icon. The *Confirm Current PIN* screen is displayed. Enter the current PIN and press the *OK* icon.

The *New PIN* screen is displayed. Enter a new 4-digit PIN number and press the *OK* icon. Enter the new PIN number again to confirm the change.

Please record the new PIN number.

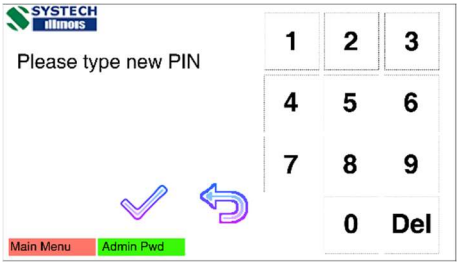

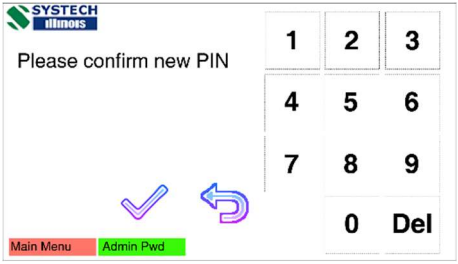

In the event of an Alarm

In the event of an alarm being activated, the EC9031 will operate the visual / audible signals, external relay alarms and the display will change colour from white to orange or red. If the oxygen level decreases below the Alarm 1 trigger level the display will change from white to orange; if the oxygen level decreases below the Alarm 2 trigger level the display will change from orange to red.



EC9031 alarms are set to 'unlatched' by default – alarms will stop when oxygen level returns to normal. When Alarm 2 de-activates the display will change from red to orange and visual / audible signals will return to Alarm 1 status. Alarm 1 de-activates when the oxygen level returns to normal, the display will change from orange to a white display in normal run mode and all alarms will stop.

Alarm 1 level is activated

If the oxygen reading falls below the Alarm 1 level (20% by default), the EC9031 will operate a continuous red-light beacon, the audible sounder will emit a continuous tone, and the Alarm 1 relay will activate.



Stop Alarm 1

To stop Alarm 1, press the *Stop Alarm* icon and enter the Admin PIN number in the *Admin PIN* screen.

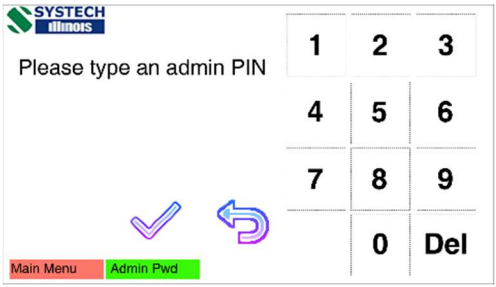

Alarm 2 level is activated

If the oxygen reading falls below the Alarm 2 level (18% by default), the EC9031 will operate a flashing red-light beacon, the audible sounder will emit an intermittent tone, and the Alarm 2 relay will activate.



Stop Alarm 2

To stop Alarm 2, press the *Stop Alarm* icon and enter the Admin PIN number in the *Admin PIN* screen.

Additional Alarm Settings



The two alarms can be set individually as 'unlatched' or 'latched' .

Unlatched

Both Alarms are set to 'unlatched' by default. Alarms will stop when the oxygen level increases above the set alarm trigger level.

Latched

An alarm set to 'latched' will remain activated when the oxygen level increases above the set alarm trigger level.

The alarms can be stopped by pressing the *Stop Alarm* icon . The display will remain in red for Alarm 2 and orange for Alarm 1 if the alarms are still activated.

Set Alarm Latch mode

In the *Admin* menu, press an *Alarm* icon to display an *Alarm* screen. Press the *Alarm Latch* icon to toggle between *Alarm Latched* *and Alarm Unlatched* .

EC9031 Log menu

The EC9031 records events in the Log. The EC9031 is capable of recording 8,000 event logs. Each log entry stores the event time, event type and oxygen, temperature and air pressure values at the time of the event. However, only the time, event type and oxygen value are displayed on the log screen. The event types are:

Temperature change (when the temperature changes by more than 2°C)	Air pressure (changes by more than 1 mbar)	Oxygen level (changes by more than 0.1%)
Alarm 1 on	Alarm 1 off (when the alarm is switched off manually)	Alarm 1 override (when the alarm is switched off manually)
Alarm 2 on	Alarm 2 off (when the alarm switches off automatically)	Alarm 2 override (when the alarm is switched off manually)
Fault on (when the unit enters a software recognized fault condition)	Fault off (when the unit recovers from the fault condition)	
Before calibration (useful if the calibration changes the oxygen level reading)	After calibration (useful if the calibration changes the oxygen level reading)	
Time event (when the user changes the system time or date)		
Power on	Power off	Watchdog event (when a watchdog activates due to an undetected software fault)

To view the Log press the touchscreen to display the *Main Menu* followed by the *Log* icon .

The display shows the list of events on the right. The graph on the left (Figure 8), shows one hour of oxygen readings around the selected event.

The number of events depends on the number of changes in the environment being monitored. An air-conditioned environment such as a hospital may record

infrequent events over several hours or days. Other environments may record multiple changes per hour.

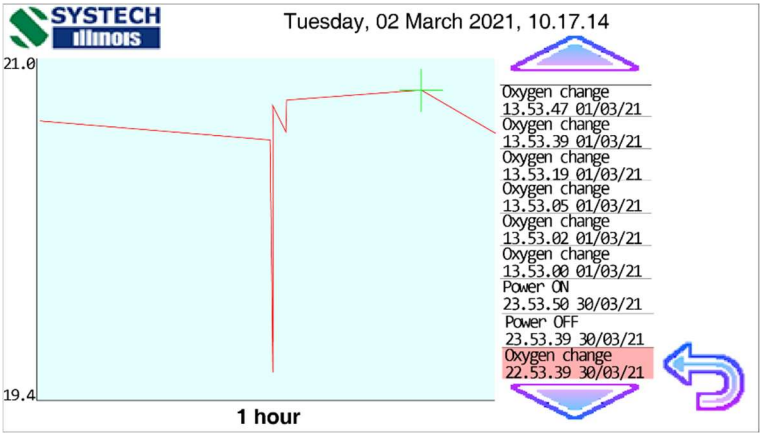

Figure 8: Graph – log

Use the Up and Down icons to scroll through the list. A green cross on the graph shows the event highlighted in the list.

Service and maintenance

It is recommended to test and calibrate the system every 6 months by following the instructions in Prepare the EC9031 for first time use. Check the Oxygen Sensor is free from debris and in an area with good air flow.

The Oxygen sensor has a limited life and should be replaced every 5 years.

There are no user serviceable parts inside. Please refer servicing and repair to an Industrial Physics service centre.

WEEE recycling information

Electrical equipment marked with this symbol may not be disposed of in European public disposal systems. In conformity with European local and national regulations



(EU Directive 2002/96/EC), European electrical equipment users must now return old or end-of-life equipment to the manufacturer for disposal at no charge to the user. Note: For return for recycling, please contact the equipment manufacturer or supplier for instructions on how to return end-of-life equipment for proper disposal.

Updating firmware

The firmware for the EC9031 Oxygen Monitor can be updated by connecting the EC9031 to a computer using the USB to RS485 Serial Converter (PN 0804-0001) and the EC9031 Firmware Updater Software (PN 0204-0011) located on the USB Memory Stick (PN 0512-0006). Below you will find instructions for wiring the RS485 lead, installing the software onto a computer, identifying the COM port and completing the update of the firmware.

Firmware version

To view the current firmware version press the touchscreen and select the *System Info* button from the *Main Menu*.

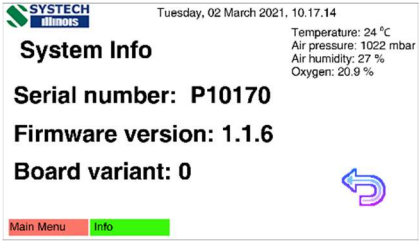

Connecting the RS485 lead

Note: connecting the RS485 lead must only be carried out by qualified service personnel.

1. Power off the EC9031 Oxygen Monitor and open the cover. Connect the RS485 lead as shown in Figure 9.

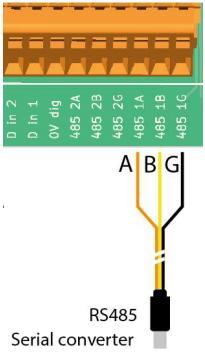

Figure 9: RS485 Serial converter wiring

2. Put the RS485 lead into a USB socket on the computer. Windows will recognise a new device is attached and should normally set a COM port number to the connected EC9031. Record the COM port number.

   If a COM port number has not been allocated refer to the section 'Identifying COM Port Number'.

Install the EC9031 Firmware Update software

1. Make sure the EC9031 Oxygen Monitor is up and running, displaying the Home screen shown on Page 15.
2. Put the USB Memory Stick into your computer and copy the 'EC9031 Firmware Updater' software to the computer hard drive.
3. Run the EC9031 Firmware Updater software, see Figure 10.

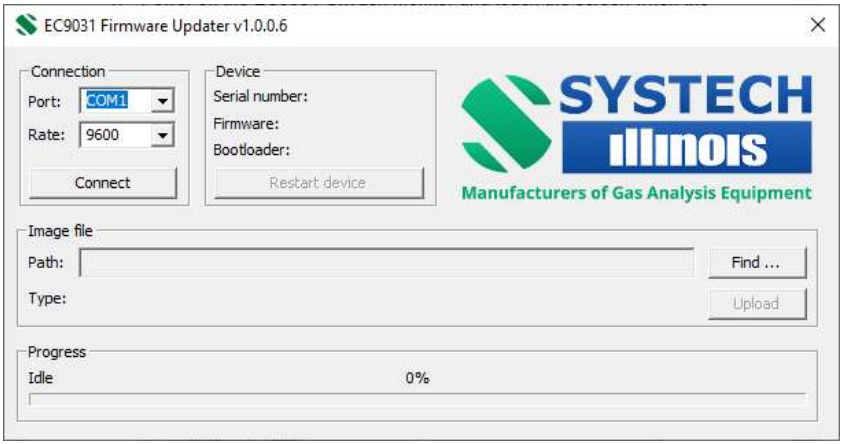

Figure 10: EC9031 Firmware Updater software

4. Select the COM port number and the baud rate from the dropdown list. The baud rate is set at the factory and is normally '9600'. Press the 'Connect' button.

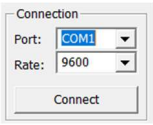

   If the connection is successful, the 'Device' group box will show the device information and the 'Connect' button will change to 'Disconnect'.

   If connection is unsuccessful, try a different COM port number from the dropdown list or refer to the section 'Identifying COM Port Number'.

Note: '9600' is the default baud rate. The update process will automatically switch this to a higher rate during the upload and back to the set value at the end of the process.

5. Under 'Image File' click on the 'Find' button and locate the update file and click on 'Upload' button. The 'Progress' bar will show the image file is being uploaded to the EC9031. The upload may take up to 15 minutes. Please do not power off the device or disconnect the serial lead during the process. When the upload is successful a pop-up window will display 'Upload completed'.

   Note: The firmware may be provided in multiple parts. In such cases, repeat Step 4 for each part. You can upload the parts in any order. The device may automatically reboot during the update.

6. After completing the firmware update, restart the EC9031 Oxygen Monitor by clicking on the 'Restart device' button (see Figure 11) and allow to run to normal operating mode.

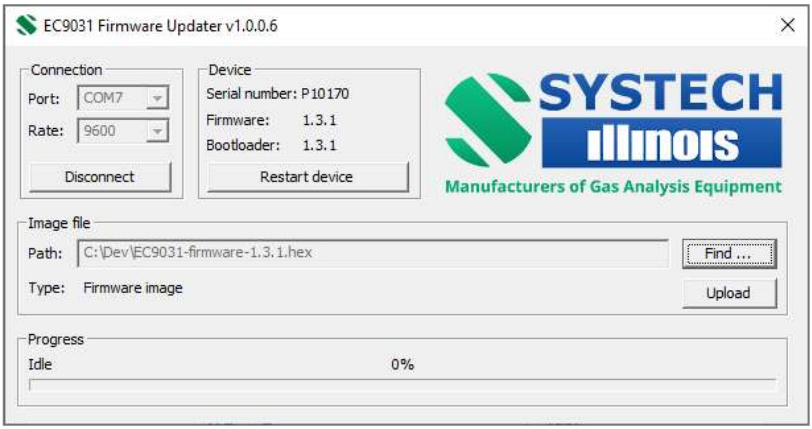

Figure 11: Restart device after firmware update

7. To remove the RS485 lead, power off the EC9031 and reverse the installation steps. Power on the EC9031 to operate in normal run mode.

Recovery mode

If the firmware update has been interrupted during the upload, for example by interrupting a power supply, the device firmware may end up corrupted. Should this happen, the EC9031 Oxygen Monitor starts up in the recovery mode, displaying only the Systech Illinois logo in the middle of the screen. To recover the device in this state, select the baud rate as '115200' and click on 'Connect'. The EC9031 Firmware Updater software will connect to the device in recovery mode.

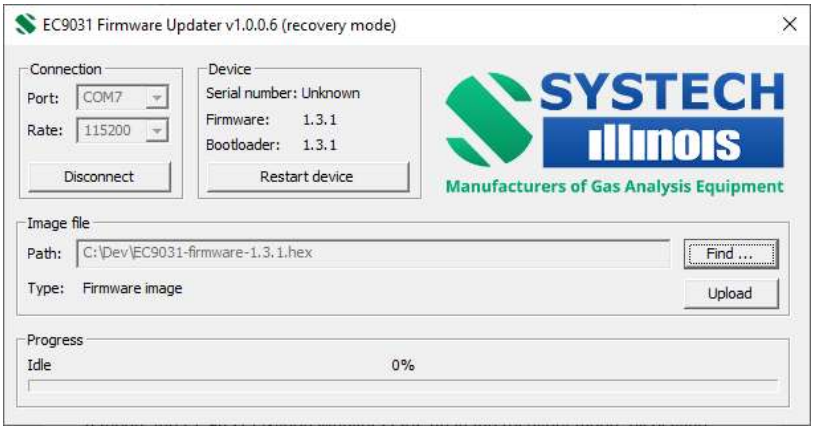

Figure 12: EC9031 Firmware Updater software in recovery mode

Follow the same instructions described in 'Install the EC9031 Firmware Update software', steps 5-7.

Identifying COM Port Number

The COM port number should normally be allocated during the 'New device' installation on Windows. In some instances it may be necessary to find the allocated COM port number in the Control Panel>Device Manager.

Locating Com port number on Device Manager

1. Click on the Windows icon and 'Settings' and type 'Device Manager' in the 'Find a setting' search box. Or type 'Device Manager' in the search box.
2. Locate the COM port menu item and click on 'COM port?'. Identify the COM port attached to the RS485 lead and note the port number.

Accessories

Item P/N	Description
096 010	Remote Ambient O2 sensor
090 256	Remote Sensor Bracket
096 015	Coax cable 27m 9way D plug/BNC free plug (wall/cell)
0032-0005	5V 2A PSU
0023-0063	Assy, Cable, 30m Coax with 9way D socket (inst/wall)
0202-0010	EC9031 Main Firmware
0512-0006	Memory Stick
0204-0011	EC9031 Firmware Updater Software
0804-0001	USB to RS485 Serial Converter 1.8m
0108-0004	EC9031 Packing Box
0508-0002	EC9031 Quick Start Guide

Specification

General description	
Dimensions	200 W x 200 H x 175 D mm
Weight	EC9031 Oxygen monitor: 1.2 Kg EC9031 Oxygen monitor including the Oxygen Sensor Assembly and cables: 3 Kg
Enclosure	IP65 enclosure (polyester)
Sensor Life	More than 5 years under normal conditions
Power supply	5VDC, 2A 10W max.
Mains Power Adapter (0032-0005)	Input: 100-240V DC 50-60Hz 0.3A Output: 5V 2000mA 10W
Measuring	
Measuring Range	0-30%
Measuring cell	Electrochemical fuel cell
Accuracy	±0.1% O_2
Response time	90% within 20 seconds
Sample gas pressure	Ambient
User Interface	
Touch Screen	11 cm (4.3 inches)
Operation Environment	
Ambient temperature	5ºC to 45ºC
Ambient humidity	0-99% RH non-condensing
Communication	
Serial port	RS485

Warranty

Post-sale Warranty Agreement

The product is warranted by the Company (Industrial Physics Product Integrity Limited) to be free from material defects in workmanship and/or materials at the time of delivery to the Customer and that for a period of one year (12 months) from such time the Company will repair or replace any Product which does not comply with this warranty PROVIDED ALWAYS THAT the Company's liability under this warranty shall be limited to the repair or replacement of affected Products and is conditional upon the Customer:

1. Notifying the Company promptly of any such material defect and in any event within such period of one year.
2. Returning to the Company the affected Products properly and adequately packed, carriage or post-paid, within fourteen days of such notification.
3. Having ensured that the Products have not been tampered with, repaired, modified or altered in any way; and
4. Ensuring that the Products are protected from harm or otherwise properly cared for and are retained in the possession of the Purchaser.

In the event of a failure as above the Company will

1. At its discretion, repair or replace the faulty unit free-of-charge for a unit returned to an authorized service centre.
2. Pay all return shipment charges from the Company service centre to the customer.
3. Re-calibrate the unit before dispatch. Acertificate of calibration will be issued as a matter of course.

Limitation of Warranty

The foregoing warranty shall not apply to defects resulting from consumable or perishable items, unauthorized modification or misuse, or operation outside specification of instrument. No other warranty is expressed or implied.

Whilst every care has been taken in compiling the information in this publication, the Company cannot accept legal liability for any inaccuracies contained herein. Industrial Physics Product Integrity Limited has an intensive program of design and development which may well alter product specification and reserve the right to alter specification without notice and whenever necessary to ensure optimum performance from its product range. It shall be deemed to exclude all other warranties and conditions whether express or implied and whether arising by common law statute or otherwise.

Industrial Physics Product Integrity Limited reserve the right to waive this benefit in any event where it is clear upon inspection that the cause of the failure is due to customer misuse. Industrial Physics Product Integrity Limited will be the sole arbiter in these circumstances.

Because software is inherently complex and may not be completely free of errors, you are advised to verify your work. In no event, will Industrial Physics Product Integrity Limited be liable for direct, indirect, special, incidental or consequential damages arising out of the use of or inability to use software or documentation, even if advised of the possibility of such damage. Industrial Physics Product Integrity Limited is not responsible for any lost profits or revenue, loss of use of software, loss of data, cost of substitute software, claims by third parties, or for other similar costs.

EU Declaration of Conformity

In accordance with the European Parliament and Council Decision No. 768/2008/EC Annex III

Object of the Declaration:

Product:	EC9031 Oxygen Monitor
Model/type:	EC9031 / Oxygen Monitor
Manufacturer:	Industrial Physics Product Integrity Limited
Address:	17 Thame Park Business Centre, Wenman Road, Thame, Oxon, OX9 3XA, United Kingdom

This declaration is issued under the sole responsibility of the manufacturer.

The object of the declaration described above is in conformity with the relevant Union harmonisation legislation:

2014/30/EU	EMC Directive
2014/35/EU	Low Voltage Directive
2011/65/EU	Restriction of Hazardous Substances in Electrical & Electronic Equipment

Compliance with the Essential Health and Safety Requirements has been assured by compliance with:

Reference & Date	**Title**
EN 61010-1:2010 + A1 2019	Safety requirements for electrical equipment for measurement, control, and laboratory use. General requirements
EN 61326-1:2013	Electrical equipment for measurement, control and laboratory use – EMC requirements

Signed for on behalf of:	Industrial Physics Product Integrity Limited
Place of issue:	Thame, United Kingdom
Date of issue:	23rd April 2021
Name:	Leigh Butler
Position:	Managing Director UK

Signature:

The technical documentation is available from the above address.





www.industrialphysics.com/PI

Industrial Physics Product Integrity Limited

17 Thame Park Business Centre, Wenman Road,

Thame OX9 3XA, United Kingdom