ANALYZER GUARDIAN

ADVANCED MICRO INSTRUMENTS
An ENPRO Company

THE NEXT GENERATION OF GAS ANALYZER PROTECTION

Pipeline gas contains varying levels of liquids comprised of compressor oils, glycol, water and many other contaminants that will condense inside unprotected Gas Analyzers. Intermittent slugs of liquids from pigging operations or heavily saturated gas streams can flood unguarded Analyzers causing expensive repairs and downtime.

AMI's Analyzer Guardian provides simple virtually maintenance-free protection against liquids and particulates entering a Gas Analyzer, without labor and expense drip pots or coalescing filters.

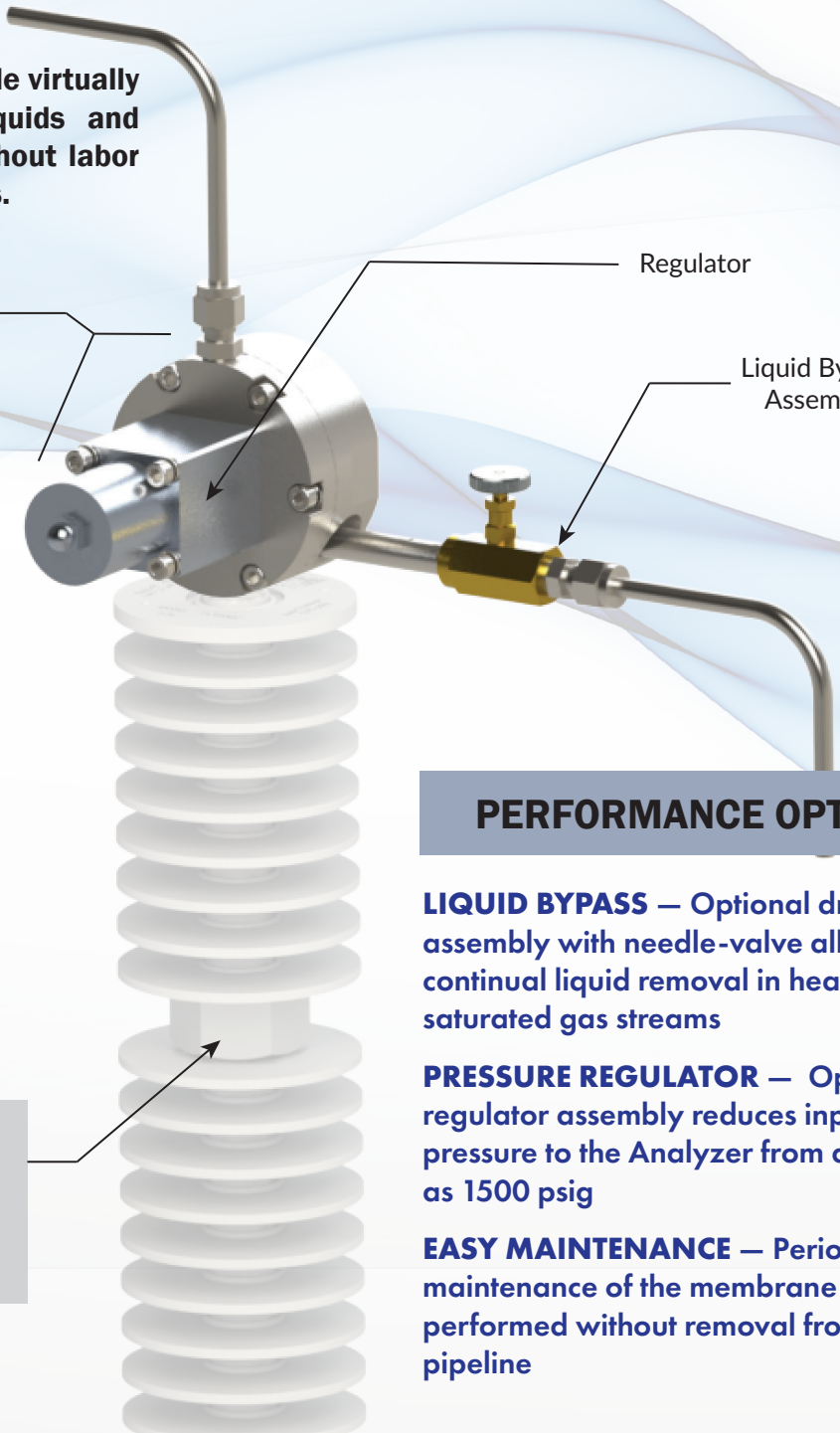

SUPERIOR PROTECTION FROM LIQUIDS

LIQUID BARRIER — Unique membrane and stainless-steel deflector disk combination work as a barrier against liquids while allowing only gas to reach the Analyzer

AUTO DRAIN — Advanced design allows condensed liquids to auto drain back into the pipeline when used with our Demister

POSITIVE SHUT-OFF — When liquid slugs flow down the gas pipeline, the Analyzer Guardian automatically shuts-off gas flow to the Analyzer until the liquids clear and then resumes flow

The Analyzer Guardian should always be used with AMI's Demister to rapidly cool sample gas and cause liquids to condense and drain into the pipeline

PERFORMANCE OPTIONS

LIQUID BYPASS — Optional drain assembly with needle-valve allows continual liquid removal in heavily saturated gas streams

PRESSURE REGULATOR — Optional regulator assembly reduces input pressure to the Analyzer from as high as 1500 psig

EASY MAINTENANCE — Periodic maintenance of the membrane can be performed without removal from the pipeline

15501 Red Hill Avenue, Suite 100
Tustin, CA 92780 USA
714.848.5533
www.amio2.com

ANALYZER GUARDIAN

SPECIFICATIONS & PERFORMANCE OPTIONS

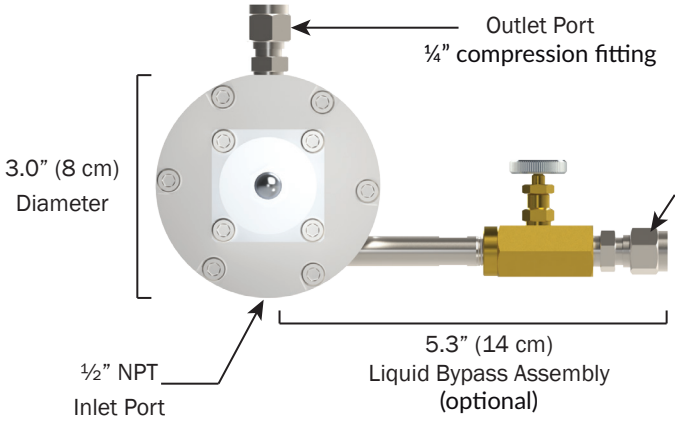

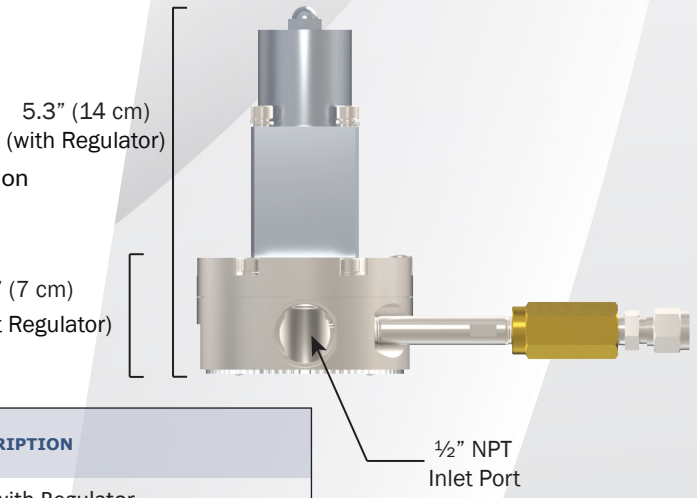

PART NUMBER	DESCRIPTION
5GRD01	Analyzer Guardian with Regulator
5GRD02	Analyzer Guardian Base Design (no Regulator)
4KIT11	Liquid Bypass Assembly for Heavily-saturated Gas

CONNECTIONS		MAXIMUM INLET PRESSURE	OUTLET PRESSURE *(for Regulator Option)*	MATERIALS OF CONSTRUCTION
INLET PORT	OUTLET PORT			
½" NPT (12.7 mm)	¼" compression fittings (6.4 mm)	1500 psig (103 bar)	0 – 25 psig (0 – 1.7 bar)	Body: 303 Stainless Steel Disk: 300 Series Stainless Steel Diaphragm: PTFE

IMPORTANT (for Regulator Configurations)
The regulator on the Analyzer Guardian will exhibit the Supply Pressure Effect (SPE). This means that changes in the inlet pressure will have an inverse effect on the regulated pressure by 1.4%. For example, if the inlet pressure decreases 100 psig, the outlet regulated pressure will increase 1.4 psig.

TYPICAL INSTALLATION

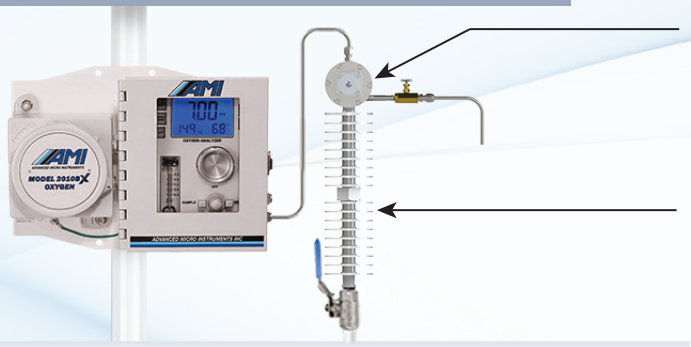

The Analyzer Guardian and Demister should be installed in the sample line upstream of the Analyzer. Both should always be installed vertically and mounted away from a heat source.

15501 Red Hill Avenue, Suite 100, Tustin, CA 92780 USA
www.amio2.com | Tel: 1.714.848.5533 | Email: sales@amio2.com

Analyzer Guardian en 2025.12, Copyright © Advanced Micro Instruments® 2025
This data sheet is a general presentation. It does not provide a warranty or guarantee of any kind.
Please contact us for a description of the warranties and guarantees offered with our products. Directions for use and safety will be given separately. All information herein is subject to change without notice.

ADVANCED MICRO INSTRUMENTS
An ENPRO Company