Oxygen Sensor Model

PSR-11-75-KE84



Advanced galvanic type % oxygen sensors with excellent stability and accuracy under stringent applications. All % oxygen sensors are subjected to the most extensive stability test, output in air, 30" of water column pressure test and stability at 100% oxygen.

The widest range of oxygen sensors offered by Analytical Industries, Inc. are "Made in USA".

Specifications

Measuring range	0-100% O_2
Signal Output (1)	47-65 mV
Response Time 90%	13 Seconds
Accuracy Full Scale (2)	± 1%
Accuracy FS Over Operating Temperature (3)	± 5%
Drift (% Signal Month) (2)	< 1%
Linearity (2)	± 1%
Humidity non-condensing	0-99% RH
Temperature Coefficient	Compensated
Operating Temperature	0-45°C
Operating Pressure	Constant 5-30 PSIG
Flow Rate	.1-10 LPM
Expected Life (1)	84 Months
Storage (4)	0 to 40°C
Warranty (5)	12 Months
Electrical Connections	2 Pin Female Molex
Packaging	Polyetylene bag in 3" x 3" x 1.5" paper box
Recommended Storage	< 6 months

Product Dimensions

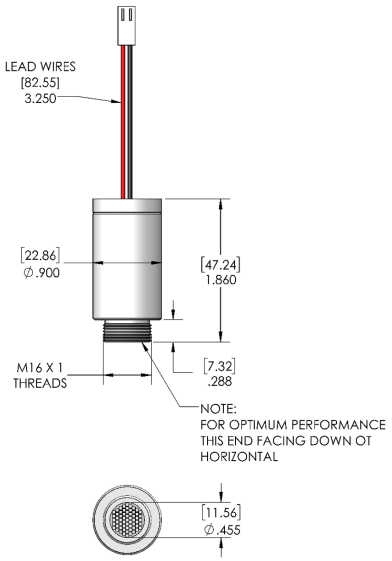

(1) In air @ 25° C and 1 atm. Expected life varies inversely with changes in O2 concentration, temperature, pressure.

(2) Under constant conditions. Calibrate as near sample conditions as possible. Calibrate with 95-100% oxygen for measurements > 40% oxygen.

(3) Once the signal output stabilizes following a step change in temperature.

(4) Recommended 0-40° C. Sensors may be stored at -10 to 55° C on an intermittent basis only.

(5) Ex-factory unless agreed to in writing. Under normal application conditions sensor is warranted to be free of defects in material and workmanship for the period specified above proved the sensor is properly installed and operated. Analytical Industries Inc. shall not be liable for buyer's negligence, misapplication, alteration or abuse. The sole remedy for a sensor determined to be defective by Analytical Industries Inc. is limited to replacing the defective sensor.

CAUTION

Analytical Industries Inc.is part of the Process Sensing Technologies Group (PST).
As customer applications are outside of PST control, the information provided is given without legal responsibility.
Customers should test under their own conditions to ensure the equipment is suitable for the intended application(s).

Analytical Industries Inc.
2855 Metropolitan Place, Pomona, California 91767 USA
Telephone +1 909 392 6900

© 2023 Process Sensing Technologies