SIEMENS

In situ Laser Gas Analyzers

Continuous gas analysis SITRANS SL

Operating Instructions

7MB6221

Introduction 1

Safety notes 2

Description 3

Application planning 4

Installation guidelines 5

Commissioning 6

Operation 7

Interfaces to automation systems 8

Service and maintenance 9

Alarm, error, and system messages 10

Technical specifications 11

Dimension drawings 12

Decommissioning, dismantling, and disposal 13

Appendix A

Product documentation and support B

List of abbreviations C

11/2024
A5E01132948-AB

Legal information

Warning notice system

This manual contains notices you have to observe in order to ensure your personal safety, as well as to prevent damage to property. The notices referring to your personal safety are highlighted in the manual by a safety alert symbol, notices referring only to property damage have no safety alert symbol. These notices shown below are graded according to the degree of danger.

⚠ DANGER

indicates that death or severe personal injury **will** result if proper precautions are not taken.

⚠ WARNING

indicates that death or severe personal injury **may** result if proper precautions are not taken.

⚠ CAUTION

indicates that minor personal injury can result if proper precautions are not taken.

NOTICE

indicates that property damage can result if proper precautions are not taken.

If more than one degree of danger is present, the warning notice representing the highest degree of danger will be used. A notice warning of injury to persons with a safety alert symbol may also include a warning relating to property damage.

Qualified Personnel

The product/system described in this documentation may be operated only by **personnel qualified** for the specific task in accordance with the relevant documentation, in particular its warning notices and safety instructions. Qualified personnel are those who, based on their training and experience, are capable of identifying risks and avoiding potential hazards when working with these products/systems.

Proper use of Siemens products

Note the following:

⚠ WARNING

Siemens products may only be used for the applications described in the catalog and in the relevant technical documentation. If products and components from other manufacturers are used, these must be recommended or approved by Siemens. Proper transport, storage, installation, assembly, commissioning, operation and maintenance are required to ensure that the products operate safely and without any problems. The permissible ambient conditions must be complied with. The information in the relevant documentation must be observed.

Trademarks

All names identified by ® are registered trademarks of Siemens Aktiengesellschaft. The remaining trademarks in this publication may be trademarks whose use by third parties for their own purposes could violate the rights of the owner.

Disclaimer of Liability

We have reviewed the contents of this publication to ensure consistency with the hardware and software described. Since variance cannot be precluded entirely, we cannot guarantee full consistency. However, the information in this publication is reviewed regularly and any necessary corrections are included in subsequent editions.

Siemens Aktiengesellschaft
Digital Industries
Postfach 48 48
90026 NÜRNBERG
GERMANY

Document order number: A5E01132948
Ⓟ 04/2025 Subject to change

Copyright © Siemens 2008 - 2024.
All rights reserved

Table of contents

1 Introduction 7

1.1 Purpose of this documentation 7

1.2 History 7

1.3 Product versions 8

1.4 General information 9

1.5 Special information and warnings 9

1.6 Proper use 9

1.7 Qualified Personnel 10

1.8 Warranty Conditions 10

1.9 Delivery information 10

1.10 Transportation and storage 11

1.11 Standards and regulations 11

1.12 Conformity with European directives 11

2 Safety notes 13

2.1 Cybersecurity information 13

2.2 Requirements for special applications 15

2.3 Analyzers in hazardous areas 17

2.4 Lithium battery 18

2.5 Explosion protection 19

2.5.1 Introduction 19

2.5.2 Variants of the Sitrans SL 20

2.5.3 Sitrans SL variant for IECEx based standards 20

2.5.3.1 Safety information 20

2.5.3.2 Installation of the sensors for explosion-proof devices 24

2.5.3.3 System set-up of Sitrans SL variant for IECEx based approval 24

2.5.3.4 Electric connections in the SITRANS SL variant for IECEx based standards 28

2.5.4 FM/CSA 33

2.5.4.1 Safety information 33

2.5.4.2 Installation of the FM/CSA version of SITRANS SL 36

2.5.4.3 FM/CSA system set-up 37

2.5.4.4 Electric connections in the FM/CSA system 40

3 Description 43

3.1 Overview 43

3.2 Benefit 44

3.3 Range of application 44

3.4 Design ... 45
3.4.1 Transmitter and receiver units ... 46
3.4.2 Display and control panel ... 49
3.4.3 Cables for connection ... 50
3.4.4 Inputs/outputs ... 51

3.5 Functional description ... 52
3.5.1 Operating principle ... 52
3.5.2 Influences on the measurement ... 54
3.5.3 Maintenance and fault messages ... 58
3.5.4 Essential characteristics ... 59

3.6 Product characteristics ... 60

4 Application planning ... 61

4.1 Preparing electric connection ... 61

4.2 Cable selection recommendations ... 62

4.3 Network and system integration ... 63
4.3.1 Overview ... 63
4.3.2 Analog I/O and digital I/O system configuration ... 64
4.3.3 PROFIBUS DP system configuration ... 66
4.3.4 Modbus system configuration ... 68

5 Installation guidelines ... 71

5.1 Safety information ... 71

5.2 Mounting ... 73
5.2.1 Mounting conditions ... 73
5.2.2 Preparations ... 73
5.2.3 Installation of process flanges ... 75
5.2.4 Installation of the sensors ... 77
5.2.5 Installation of the purging tubes ... 79

5.3 Electric connections non Ex ... 80
5.3.1 System set-up (non Ex only) ... 80
5.3.2 Screw terminals ... 82
5.3.3 Connecting cables ... 86

5.4 Alignment of SITRANS SL ... 90
5.4.1 Alignment kit ... 91
5.4.2 Alignment procedure ... 92
5.4.3 Process interface without springs for long path application ... 96
5.4.3.1 Alignment kit ... 96
5.4.3.2 Alignment procedure ... 97

5.5 Purging ... 101
5.5.1 Sensor side purging ... 102
5.5.2 Process side purging ... 103
5.5.3 Purging set-up ... 104

6 Commissioning ... 105

6.1 General information for commissioning ... 105

6.2 Starting SITRANS SL for the first time ... 106

6.2.1 Defining the path length ... 106
6.2.2 Further input parameters ... 106

6.3 PROFIBUS configuration for SITRANS SL ... 107
6.3.1 Cyclic data transfer ... 107
6.3.2 System integration ... 107
6.3.3 SIMATIC MPI cable installation ... 108
6.3.4 PG/PC interface setting ... 109
6.3.5 Loading GSD file ... 110
6.3.6 Network configuration with SIMATIC Manager ... 113
6.3.7 Creation of a new project with SIMATIC Manager ... 114
6.3.8 Hardware configuration ... 119

6.4 Modbus configuration for SITRANS SL ... 123
6.4.1 Modbus settings ... 123
6.4.2 Byte and word ordering ... 124
6.4.3 Supported Modbus functions ... 125

7 Operation ... 127

7.1 General ... 129

7.2 Measurement views ... 132

7.3 Menu system ... 133
7.3.1 The menu structure ... 133
7.3.2 Setup ... 134
7.3.3 Diagnostics ... 138
7.3.4 Service ... 140
7.3.5 Communication ... 143
7.3.6 Security ... 145
7.3.7 Language ... 146

8 Interfaces to automation systems ... 147

8.1 PROFIBUS DP interface ... 147
8.1.1 PROFIBUS installation ... 147
8.1.2 Device data base files (GSD) ... 149
8.1.3 Technical data ... 149
8.1.4 Cyclic data transmission over PROFIBUS ... 149
8.1.4.1 Cyclic data structure ... 149
8.1.4.2 Quality byte ... 150

8.2 Modbus interface ... 152
8.2.1 Modbus installation ... 152
8.2.2 SITRANS SL Modbus map for gas measurement ... 153
8.2.3 Quality byte coding ... 153
8.2.4 Modbus adresses ... 156
8.2.4.1 Standard Modbus ... 156
8.2.4.2 Enron Modbus ... 158
8.2.4.3 Modbus alarm list ... 160

9 Service and maintenance ... 165

9.1 Ordering of spare parts ... 165

9.2 Accessories ... 167

9.3 Instrument verification ... 168

9.3.1 Verification with the verification tube ... 169
9.3.1.1 Verification tube ... 170
9.3.1.2 Span verification ... 170
9.3.2 Verification with a verification cell ... 176
9.3.2.1 Span verification ... 176
9.3.3 Instrument verification for O2 high temperature applications ... 178
9.3.3.1 Verification with the verification tube ... 178
9.3.3.2 Span verification ... 178
9.3.4 Verification of systems used in hazardous areas ... 182
9.4 Cleaning the optical parts of the sensor ... 182
10 Alarm, error, and system messages ... 185
10.1 Alarm ... 185
10.2 Alarm list ... 191
10.3 PROFIBUS diagnosis and alarms ... 198
10.3.1 Diagnosis and alarm handling in PROFIBUS DP ... 198
10.3.2 Meaning of the diagnosis information ... 199
11 Technical specifications ... 203
12 Dimension drawings ... 209
13 Decommissioning, dismantling, and disposal ... 213
13.1 Safety instructions ... 213
13.2 Decommissioning the device ... 214
13.3 Dismantling the device ... 214
13.4 Disposing of the device ... 215
13.5 Information on recycling ... 215
13.6 Technical support ... 216
A Appendix ... 217
A.1 Gas flow calculations ... 217
A.2 Classification according to Pressure Equipment Directive (2014/68/EU) ... 218
A.3 ESD (ElectroStatic Discharge) ... 218
A.4 Verification Sheets ... 220
A.5 Product documentation ... 223
A.6 Marking A in accordance with KC (Korea) ... 224
B Product documentation and support ... 225
B.1 Product documentation ... 225
B.2 Technical support ... 226
C List of abbreviations ... 227
Glossary ... 231
Index ... 237

Introduction

1

1.1 Purpose of this documentation

Before beginning work with this device, please study this manual carefully! It contains important information and data whose observation ensures proper device function and saves you servicing costs. The manual will help you to operate the device more easily and efficiently, allowing you to achieve reliable results.

1.2 History

The following table shows the most important changes in the documentation compared to each previous edition:

Edition	Remark
01 03/2008	First edition
02 05/2009	Revision of contents and layout • Illustrations of the device have been changed due to changes of the device housing. • All chapters have new enhanced contents, except the following chapters: – NEW: " Network and system integration"" – NEW: "Process interfacing over an automation system (PLC, PC)" – NEW: "Spare parts and accessories" – NEW: "Service and support" – NEW: "Interfaces to automation systems" – NEW: "Glossary"
03 07/2010	Revision of contents and layout • Carbon monoxide (CO) introduced as measuring gas
04 12/2010	Update of contents and layout
01/2022	Update of contents and layout
07/2024	Update for new Ex certificates

1.3 Product versions

The product version number is found under the article number on the nameplate (see following figure).

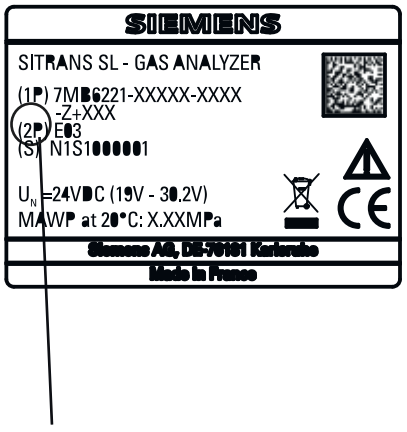

Nameplate showing the position of the version no.

1.4 General information

The product described in this manual has left the factory in a high quality and tested condition. In order to preserve this condition and to operate this product correctly and safely, it may only be used in the manner described by the manufacturer. Furthermore, proper transportation, storage, installation, operation and maintenance of the device is vital for ensuring correct and safe operation.

This manual contains the information required for the intended use of the described product.

It is addressed to technically qualified personnel who are specially trained or who have the relevant knowledge of automation technology (measuring and control systems).

Knowledge and technically correct implementation of the safety notes and warnings contained in this manual are required for safe installation and commissioning, as well as for safety during the operation and maintenance of the described product. Only qualified personnel have the required professional knowledge for correctly interpreting the generally valid safety notes and warnings in this manual in each specific case and to act accordingly.

This manual is an inherent part of the scope of delivery, despite the fact that it can be ordered separately for logistic reasons.

Due to the variety of technical details, it is not possible to consider every single detail for all versions of the described product and for every conceivable case in the set-up, operation, maintenance and use in systems. For further information, or in the case of problems which are not covered in enough detail in this document, please request the required information from your local or responsible Siemens regional office.

Note

In particular, before using the device for new research and development applications, we recommend that you first contact your Siemens representative or our application department to discuss the application in question.

1.5 Special information and warnings

This manual provides you with information on using, installing, operating, and maintaining the device.

Pay particular attention to all special information and warnings. Information of this type is set apart from the rest of the text and is marked with the corresponding pictograms. This information provides you with useful tips and helps to avoid faulty operation.

1.6 Proper use

Proper use within the context of this document means that the product may be used only for the applications described in the catalog or the technical description, and only in combination with the equipment, components and devices of other manufacturers recommended or permitted by Siemens.

The product described in this document has been developed manufactured, tested and documented in compliance with relevant safety standards. When the handling rules

described for the configuration, installation, proper operation and maintenance, as well at the safety guidelines are adhered to, therefore, there is normally no risk to the health of persons or in respect to damage to property.

This product was designed to ensure safe isolation of the primary and secondary circuits. Low voltages that are connected must therefore also be generated with safe isolation.

1.7 Qualified Personnel

Qualified personnel are individuals who are familiar with the installation, mounting, commissioning, and operation of the product. These people have the following qualifications:

- They are authorized, trained or instructed in operating and maintaining devices and systems according to the safety regulations for electrical circuits, high pressures and aggressive as well as hazardous media.
- For explosion-proof devices: They are authorized, trained, or instructed in carrying out work on electrical circuits for hazardous systems.
- They are trained or instructed in the maintenance and use of appropriate safety equipment according to the safety regulations.

1.8 Warranty Conditions

We expressly point out that the product quality is exclusively and conclusively described in the sales contract. The content of this product documentation is neither a part of a previous or existing agreement, promise or legal relationship, nor is it intended to modify these. All obligations on the part of Siemens AG are contained in the respective sales contract, which also contains the complete and solely applicable liability provisions. The provisions defined in the sales contract for the responsibility for defects are neither extended nor limited by the remarks in this document.

1.9 Delivery information

The respective scope of delivery is listed on the shipping documents – enclosed with the delivery – in accordance with the valid sales contract.

When opening the packaging, please observe the corresponding information on the packaging material. Check the delivery for completeness and undamaged condition. In particular, you should compare the Order No. on the nameplates with the ordering data, if available.

If possible, please retain the packaging material, since you can use it again in case of return deliveries.

1.10 Transportation and storage

To guarantee sufficient protection during transport and storage, observe the following:

- Keep the original packaging for subsequent transportation.
- Devices/replacement parts should be returned in their original packaging.
- If the original packaging is no longer available, ensure that all shipments are properly packaged to provide sufficient protection during transport. Siemens cannot assume liability for any costs associated with transportation damages.

NOTICE
Insufficient protection during storage The packaging only provides limited protection against moisture and infiltration. • Provide additional packaging as necessary.

Special conditions for storage and transportation of the device are listed in Technical specifications (Page 203).

1.11 Standards and regulations

As far as possible, the harmonized European standards were the basis for the specification and production of this device. If no harmonized European standards have been applied, the standards and regulations for the Federal Republic of Germany are valid.

When this product is used beyond the scope of these standards and regulations, the valid standards and regulations of the country of the operating company apply.

1.12 Conformity with European directives

The CE marking on the device symbolizes the conformity with the following European directives:

Electromagnetic compatibility EMC 2014/30/EU	Directive of the European Parliament and of the Council on the harmonisation of the laws of the Member States relating to electromagnetic compatibility
Atmosphère explosible ATEX 2014/34/EU	Directive of the European Parliament and the Council on the harmonisation of the laws of the Member States relating to equipment and protective systems intended for use in potentially explosive atmospheres
Restriction of hazardous substances directive RoHS 2011/65/EU	Directive of the European Parliament and the Council on the restriction of the use of certain hazardous substances in electrical and electronic equipment

The applicable directives can be found in the EU declaration of conformity of the specific device.

Safety notes

2

2.1 Cybersecurity information

Siemens provides products and solutions with industrial cybersecurity functions that support the secure operation of plants, systems, machines and networks.

In order to protect plants, systems, machines and networks against cyber threats, it is necessary to implement – and continuously maintain – a holistic, state-of-the-art industrial cybersecurity concept. Siemens' products and solutions constitute one element of such a concept.

Customers are responsible for preventing unauthorized access to their plants, systems, machines and networks. Such systems, machines and components should only be connected to an enterprise network or the internet if and to the extent such a connection is necessary and only when appropriate security measures (e.g. firewalls and/or network segmentation) are in place.

For additional information on industrial cybersecurity measures that may be implemented, please visit
https://www.siemens.com/cybersecurity-industry.

Siemens' products and solutions undergo continuous development to make them more secure. Siemens strongly recommends that product updates are applied as soon as they are available and that the latest product versions are used. Use of product versions that are no longer supported, and failure to apply the latest updates may increase customer's exposure to cyber threats.

To stay informed about product updates, subscribe to the Siemens Industrial Cybersecurity RSS Feed under
https://new.siemens.com/cert.

⚠ WARNING

Unsafe operating states resulting from software manipulation

Software manipulations (e g. Trojans, viruses, malware or worms) can cause unsafe operating states in your system that may lead to death, serious injuries, and property damage. To prevent these states:

- Always keep the software up to date.
- Incorporate the automation and drive components into a holistic, state-of-the-art industrial security concept for the installation or machine. Make sure that all installed products are part of this holistic industrial security concept.
- Protect files stored on exchangeable storage media from malicious software by with suitable protection measures, e.g. virus scanners.

This device left the factory in good working condition. In order to maintain this status and to ensure safe operation of the device, observe these instructions and all the specifications relevant to safety.

Observe the information and symbols on the device. Do not remove any information or symbols from the device. Always keep the information and symbols in a completely legible state.

Symbol	Explanation of the symbols on the device
	Consult operating instructions
	Warning of hot surface
	Warning of dangerous voltage
	Warning of laser beams

WARNING

Improper device modifications

Risk to personnel, system and environment can result from modifications to the device, particularly in hazardous areas.

- Only carry out modifications that are described in the instructions for the device. Failure to observe this requirement cancels the manufacturer's warranty and the product approvals.

WARNING

Unsuitable device for the hazardous area

Danger of explosion.

- Only use equipment that is approved for use in the intended hazardous area and labelled accordingly.

2.2 Requirements for special applications

Due to the large number of possible applications, each detail of the described device versions for each possible scenario during commissioning, operation, maintenance or operation in systems cannot be considered in the instructions. If you need additional information not covered by these instructions, contact your local Siemens office or company representative.

Note

Operation under special ambient conditions

We highly recommend that you contact your Siemens representative or our application department before you operate the device under special ambient conditions as can be encountered in nuclear power plants or when the device is used for research and development purposes.

The device complies with the applicable safety standards. If the handling instructions and safety information are observed, no dangers exist when using the device which could endanger the health of personnel or result in damage to property.

You will find the safety information:

- In these operating instructions and in the (detailed) operating instructions of the device
- On the device
- On the device components

Electric safety

⚠ WARNING

Improper power supply

Observe the specifications of the examination certificate valid in your country.

Check whether the available power supply is compliant with the power supply specified on the nameplate and specified in the examination certificate valid in your country.

⚠ WARNING

Opening device in energized state

Danger of explosion in areas subject to explosion hazard.

Only open the device in a de-energized state.

- Check prior to commissioning that the cover, cover locks, and cable inlets are assembled in accordance with the directives.
  Exception: Devices having the type of protection "Intrinsic safety Ex i" may also be opened in an energized state in dust-free hazardous areas when all necessary measures for explosion protection are ensured.

Note

The equipment does not provide 500 V insulation between intrinsically safe circuits and ground as required by EN/IEC 60079-11 Clause 6.3.13.

Materials in the optics housings

⚠ WARNING

Impact or friction of device enclosure

The device enclosure contains aluminum and is considered to constitute a potential risk of ignition by impact or friction.

- Take precautions to avoid any ignition hazard caused by impact or friction due to the content of light metals in the optics housings.

The optics housing (transmitter and receiver) is built mainly using stainless or surface treated steel and an aluminum alloy (content of aluminum >85 %; content of magnesium, titanium and zirconium <0.7 %) and an O ring made of FKM or FFKM.

Pressure safety

For pressure specifications refer to the Technical specifications (Page 203).

⚠ WARNING

Damage to operating staff

Whenever the optics housings heads are to be opened or disconnected from the process interface or the gas tubing make sure that any overpressure in the optics housings heads is removed prior to any work. Opening optics housings under overpressure may result in dangerous injuries to the operator.

⚠ WARNING

Damage caused corrosive by process gas

When the optics housing purging is connected to the process purging, it may be necessary to use non-return valves to ensure no process gas can enter the purging gas line in the event of failure of the purging gas supply. This applies especially in the case of cascaded process and optics housing purging where there is otherwise the danger that, for example, corrosive process gases could enter the optics housing enclosure.

⚠ WARNING

Damaged optics

The high pressure-proof glass in the optics housings must not be subject to any mechanical impact which might cause damage to the glass (scratch, gash etc.). Only use a soft cloth for cleaning of the glass. Make sure that it is safe to dismount the optics housing before cleaning.

⚠ WARNING

Malfunction of sealing

Make sure all plugs and tube fittings are sealed with the enclosed pipe thread sealant. Instructions given on the sealant tube must be carefully followed.

Laser safety

⚠ CAUTION

Change of laser class

The analyzer is classified as a class 1 laser product. The emitted laser light is invisible (near infrared) and not hazardous to the unprotected eye. The analyzer has warning labels at appropriate positions according to EN 60825-1:2014.

2.3 Analyzers in hazardous areas

⚠ WARNING

Unsuitable accessories for hazardous areas

The use of the alignment kit (optional) for aligning the sensors is not covered by the certificate for the use of the analyzer in hazardous areas.

The use of the verification kit (optional) for verifying or calibrating the sensors is not covered by the certificate for the use of the analyzer in hazardous areas.

- These devices must only be used in an atmosphere without any risk of explosion (hot work permit)!

⚠ WARNING

Incorrect choice of explosion protection type

Danger of explosion in hazardous areas.

If this device is approved for various types of protection:

1. Choose one type of protection.
2. Connect the device according to this type of protection.
3. To prevent improper use at a later time, conceal the other protection types on the label that are not being used on a sustained basis.

⚠ WARNING

Maintenance during continued operation in a hazardous area

There is a risk of explosion when carrying out repairs and maintenance on the device in a hazardous area.

- Isolate the device from power.

- or -

- Ensure that the atmosphere is explosion-free (hot work permit).

⚠ WARNING

Use in hazardous area

Risk of explosion.

- Only use equipment that is approved for use in the intended hazardous area and labeled accordingly.
- Do not use devices that have been operated outside the conditions specified for hazardous areas. If you have used the device outside the conditions for hazardous areas, make all Ex markings unrecognizable on the nameplate.

Qualified personnel for hazardous area applications

Persons who install, connect, commission, operate, and service the device in a hazardous area must have the following specific qualifications:

- They are authorized, trained or instructed in operating and maintaining devices and systems according to the safety regulations for electrical circuits, high pressures, aggressive, and hazardous media.
- They are authorized, trained, or instructed in carrying out work on electrical circuits in hazardous areas.
- They are trained or instructed in maintenance and use of appropriate safety equipment according to the pertinent safety regulations.

2.4 Lithium battery

The remote control unit is powered by a lithium battery.

Lithium batteries are primary power sources with high energy content designed to provide the highest possible degree of safety.

⚠ WARNING

Potential hazard

Lithium batteries may present a potential hazard if they are abused electrically or mechanically. Observe the following precautions when handling and using lithium batteries:

- Do not short-circuit, recharge or connect with false polarity.
- Do not expose to temperatures beyond the specified temperature range.
- Do not incinerate.
- Do not crush, puncture or open cells or disassemble.
- Do not weld or solder to the battery's body.
- Do not expose contents to water.

2.5 Explosion protection

2.5.1 Introduction

The basic principles of explosion protection are the same all over the world. However, technologies have developed in North America in the field of explosion protection for electric equipment and installations which are considerably different from those of the IEC (International Electrotechnical Commission). The differences from IEC technologies are among others the classification of hazardous locations, the construction of devices and the installation of electric systems.

⚠ WARNING

The FM certificate is a system certificate and is only valid if SITRANS SL is installed according to the instructions given in the certificate.

Certificate type	Ignition protection type	Certificate number
ATEX	⟨Ex⟩ II 2 G Ex db eb op is IIC T6 Gb ⟨Ex⟩ II 2 D Ex tb IIIC T 85°C Db	UL 23 ATEX 3032X Rev. 0
IECEx	Ex db eb op is IIC T6 Gb Ex tb IIIC T 85°C Db	IECEx UL 23.0044X

Certificate type	Ignition protection type	Certificate number
FM	Class I, Division 1, Groups A, B, C, D; T6 Ta = 55°C; Class I, Zone 1, AEx db IIC T6 Gb Ta=55°C; Class II/III, Division 1, Groups E, F, G, T6 Ta = 55°C; Zone 21, AEx tb IIIC T8 5°C Db Ta = 55°C Type 4X, IP65 Class 1, DIV 1 Groups A,B,C,D	FM17US0050X
CSA-C22.2	Class I, Division 1, Groups C, D; T6 Ta = 55°C; Class I, Zone 1 Ex db IIC T6 Gb Ta=55°C; Class II/III, Division 1, Groups E, F, G, T6 Ta = 55°C; Zone 21, Ex tb IIIC T85 °C Db Ta = 55°C Type 4X, IP65	FM17CA0028X

2.5.2 Variants of the Sitrans SL

IECEx and FM/CSA

There are two explosion protection variants of the Sitrans SL. One for IECEx based standards like ATEX which will be referred to as IECEx. The other variant is FM/CSA certifications and will be referred to as such.

2.5.3 Sitrans SL variant for IECEx based standards

2.5.3.1 Safety information

The device complies with the applicable safety standards. If the handling instructions and safety information are observed, no dangers exist when using the device which could endanger the health of personnel or result in damage to property.

You will find the safety information:

- In these operating instructions and in the (detailed) operating instructions of the device
- On the device
- On the device components

Electric safety

⚠ WARNING

Improper power supply

Observe the specifications of the examination certificate valid in your country.

Check whether the available power supply is compliant with the power supply specified on the nameplate and specified in the examination certificate valid in your country.

⚠ WARNING

Opening device in energized state

Danger of explosion in areas subject to explosion hazard.

Only open the device in a de-energized state.

- Check prior to commissioning that the cover, cover locks, and cable inlets are assembled in accordance with the directives.
  Exception: Devices having the type of protection "Intrinsic safety Ex i" may also be opened in an energized state in dust-free hazardous areas when all necessary measures for explosion protection are ensured.

Note

The equipment does not provide 500 V insulation between intrinsically safe circuits and ground as required by EN/IEC 60079-11 Clause 6.3.13.

Materials in the optics housings

⚠ WARNING

Impact or friction of device enclosure

The device enclosure contains aluminum and is considered to constitute a potential risk of ignition by impact or friction.

- Take precautions to avoid any ignition hazard caused by impact or friction due to the content of light metals in the optics housings.

The optics housing (transmitter and receiver) is built mainly using stainless or surface treated steel and an aluminum alloy (content of aluminum >85 %; content of magnesium, titanium and zirconium <0.7 %) and an O ring made of FKM or FFKM.

Pressure safety

For pressure specifications refer to the Technical specifications (Page 203).

⚠ WARNING

Damage to operating staff

Whenever the optics housings heads are to be opened or disconnected from the process interface or the gas tubing make sure that any overpressure in the optics housings heads is removed prior to any work. Opening optics housings under overpressure may result in dangerous injuries to the operator.

WARNING

Damage caused corrosive by process gas

When the optics housing purging is connected to the process purging, it may be necessary to use non-return valves to ensure no process gas can enter the purging gas line in the event of failure of the purging gas supply. This applies especially in the case of cascaded process and optics housing purging where there is otherwise the danger that, for example, corrosive process gases could enter the optics housing enclosure.

WARNING

Damaged optics

The high pressure-proof glass in the optics housings must not be subject to any mechanical impact which might cause damage to the glass (scratch, gash etc.). Only use a soft cloth for cleaning of the glass. Make sure that it is safe to dismount the optics housing before cleaning.

WARNING

Malfunction of sealing

Make sure all plugs and tube fittings are sealed with the enclosed pipe thread sealant. Instructions given on the sealant tube must be carefully followed.

Laser safety

CAUTION

Change of laser class

The analyzer is classified as a class 1 laser product. The emitted laser light is invisible (near infrared) and not hazardous to the unprotected eye. The analyzer has warning labels at appropriate positions according to EN 60825-1:2014.

Remote control

The SITRANS SL can be operated at site with an infrared remote control.

This device is intrinsically safe and certified for use in hazardous locations.

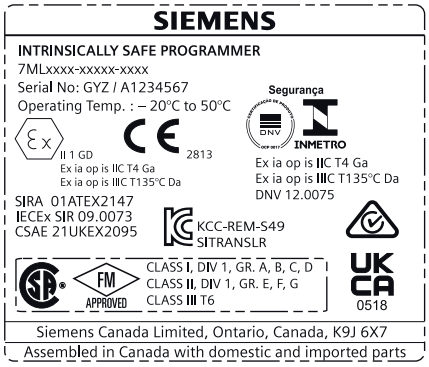

Figure 2-1 Remote control nameplate

The following figure shows the keypad layout of the remote control.

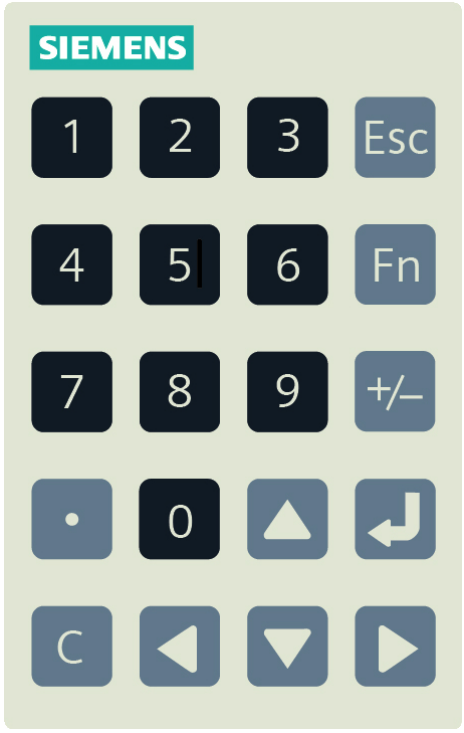

Figure 2-2 Keypad of the remote control for SITRANS SL

2.5.3.2 Installation of the sensors for explosion-proof devices

The installation of the IECEx sensors can be performed by the customer provided the instructions given in the certificate are fully observed.

WARNING

Loss of explosion protection properties

The test certificate for your explosion-proof device only applies to the original configuration as well as to the installation and connection according to the switching and piping plans of Siemens. If one or more components are changed, the explosion protection properties of your device are abolished.

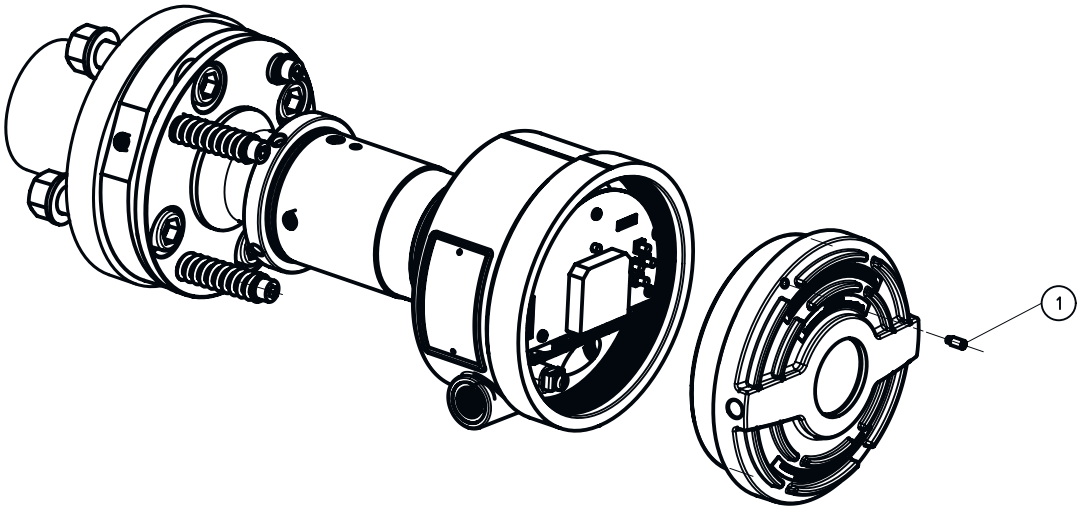

① Sensor housing lid locking screw

Figure 2-3 Installation of the Sitrans SL variant for IECEx based standards

WARNING

Unsuitable use in hazardous areas

The locking screw must be tightened or the IECEx based approvals will be violated!

See also

Alignment procedure (Page 92)

2.5.3.3 System set-up of Sitrans SL variant for IECEx based approval

The concept of the IECEx approvals and approvals based on IECEx is that the system is not modified by the user and that special Ex-approved cables and bushings are used. An absolute condition for the approval is that the equipment is setup according to the instructions stated in this section.

Liability

Following commissioning, the total responsibility is with the owner.

The figure below shows the cabling of the transmitter and receiver sensors.

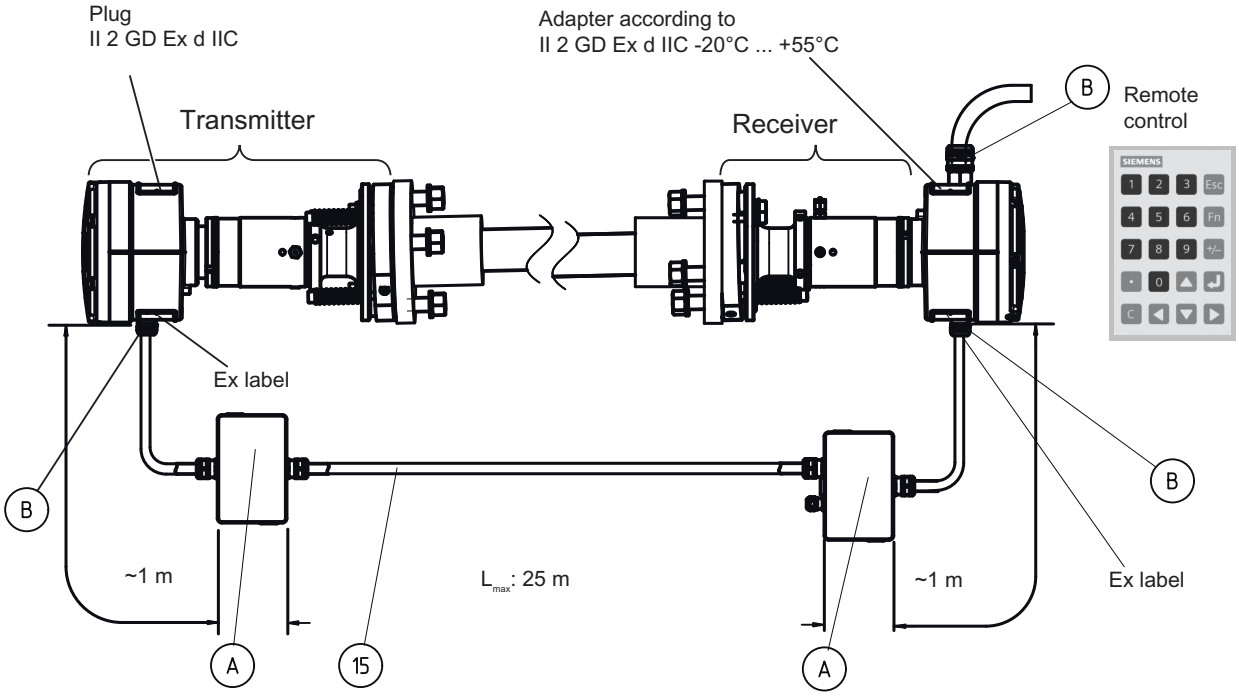

Ⓐ Box, connectors and cable glands acc. to
II 2 GD Ex e IIC T6

Ⓑ Gland / Connector acc. to
II 2 GD Ex d IIC - 20 °C ... + 55 °C

⑮ Sensor connection cable

Complete system in hazardous areas

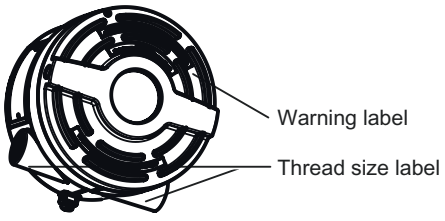

Figure 2-4 Overview of the Sitrans SL variant for IECEx based approvals

SITRANS SL is delivered with the cables already connected in the receiver and the transmitter. The cable to the customer side is approximately 3 meters long and must be connected in a junction box (not part of the delivery) in which the customer cable is joined to the system. The sensor connection cable ⑮ is delivered in a standard length (5 m, 10 m or 25 m) and can be cut to a convenient length. The sensor connection cable is then connected to two junction boxes which are mounted to the receiver and transmitter respectively. The cable glands provided in those junction boxes connected to the sensor connection cable must be torqued with the following settings in order to secure the cable assembly: 5 Nm for the M16 cable gland and 7 Nm for the M20 cable glands. The optional cable (not part of the delivery)

secured with the M16 cable gland to the junction box at receiver side must have a diameter comprised between 5mm and 9.5mm.

Note

Specific requirements for the measuring point might require the utilization of special sensor equipment. The possibilities for adapting the sensors are:

- Special materials for purging tubes (on request)
- Various types/sizes of sensor flanges
- Ex-proof sensor configurations

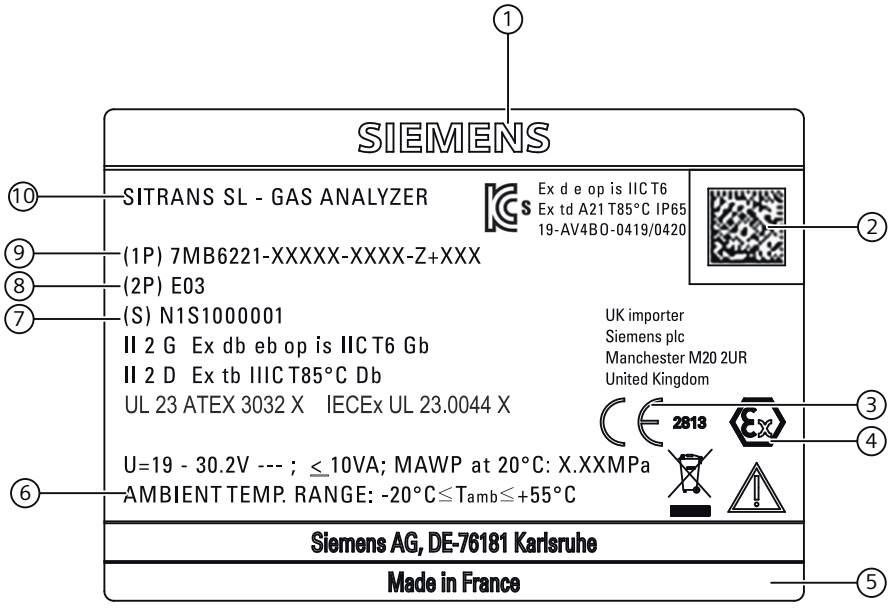

①	Manufacturer	⑥	Measuring range
②	Datamatrix code	⑦	Serial number
③	CE marking	⑧	Product version
④	Ex marking with Ex data	⑨	Article number
⑤	Country of origin	⑩	Product name



Figure 2-5 Warning label SITRANS SL



Figure 2-6 Thread size label SITRANS SL

2.5.3.4 Electric connections in the SITRANS SL variant for IECEx based standards

⚠ WARNING

Unsafe operating states resulting from unsafe electric installation

According to EN/IEC 60079-14 all work on the Ex e junction box must be carried out only by qualified specialist personnel. Please read the supplied safety instructions for the junction box carefully. Failure to do so might result in malfunction of the device.

The electric connections are done in two junction boxes between the receiver and the transmitter and in one junction box connecting the customer cable. The connections inside the unit housings are done in the factory before delivery and work here can only be done by certified technicians.

The tables below illustrate the connections in the main junction box providing all input and output connectors to the SITRANS SL.

Sensor connection cable

The sensor connection cable connects the junction boxes to the receiver and transmitter of the SITRANS SL. This cable is used to transfer:

- 100 kbps RS-485 communication
- power for the transmitter
- ground.

Table 2-1 Electric connection sensor connection cable, valid for the SITRANS SL variant for IECEx based standards

Conductor color	Connector position (Receiver junction box)	Connector position (Transmitter junction box)	Remarks	Function
Red	1	1	+	24 V DC power supply to transmitter unit
Blue	2	2	-	
Pink	3	3	Com+	RS 485 communication
Grey	4	4	Com-	
White	5	5	Sync+	
Brown	6	6	Sync-	
Green	PE terminal	PE terminal		
Yellow	PE terminal	PE terminal		
Shield	Gland	Gland		

Receiver junction box cable

Table 2-2 Electric connections for receiver junction box cable, valid for the SITRANS SL variant for IECEx based standards

Conductor color	Connector position (Receiver junction board)	Connector position (Receiver junction box)	Remarks	Function
Red	L1	1	+	24 V DC power supply to transmitter unit
Blue	L2	2	-	
Pink	L3	3	Com+	RS 485 communication
Grey	L4	4	Com-	
White	L5	5	Sync+	
Brown	L6	6	Sync-	
Green	Chassis	PE terminal		
Yellow	Chassis	PE terminal		
Grey - pink	16	8	Tx+	Ethernet connection
Red - blue	17	9	Tx-	
Black	18	10	Rx+	
Violet	19	11	Rx-	
Shield	Gland	Gland		

The electric connections for the receiver junction box cable, valid for the SITRANS SL variant for IECEx based standards have changed to read as shown in the following table. This change applies to receiver cables as delivered from June 2018 on to be identified by a cable gland with red cap.

Table 2-3 Electric connections for receiver junction box cable, valid for the SITRANS SL variant for IECEx based standards

Conductor color	Connector position (Receiver junction board)	Connector position (Receiver junction box)	Remarks	Function
Red	L1	1	+	24 V DC power supply to transmitter unit
Blue	L2	2	-	
Pink	L3	3	Com+	RS 485 communication
Grey	L4	4	Com-	
White	L5	5	Sync+	
Brown	L6	6	Sync-	
Green	16	8	Tx+	Ethernet connection
Yellow	17	9	Tx-	
Black	18	10	Rx+	
Violet	19	11	Rx-	
Shield	Gland	Gland		

Transmitter junction box cable

Table 2-4 Electric connections for transmitter junction box cable, valid for the SITRANS SL variant for IECEx based standards

Conductor color	Connector position (Transmitter junction board)	Connector position (Transmitter junction box)	Remarks	Function
Red	L1	1	+	24 V DC power supply to transmitter unit
Blue	L2	2	-	
Pink	L3	3	Com+	RS 485 communication
Grey	L4	4	Com-	
White	L5	5	Sync+	
Brown	L6	6	Sync-	
Green	Chassis	PE terminal		
Yellow	Chassis	PE terminal		
Shield	Gland	Gland		

The electric connections for the transmitter junction box cable, valid for the SITRANS SL variant for IECEx based standards as delivered from June 2018 on to be identified by a cable gland with red cap are the same as for the former versions.

Connection cable

Table 2-5 Electric connections for connection cable analog and Modbus, valid for the SITRANS SL variant for IECEx based standards

Conductor color	Connector position (Receiver junction board)	Remarks	Function
Red	1	+	Supply voltage
Blue	2	-	19 ... 30.2 V DC, ≤10 VA [1]
Pink	3	Closed when energized [4]	Digital Out 0 (relay)
Grey	4		30 V DC, 0.5 A [3]
White	5	Closed when energized [4]	Digital Out 1 (relay)
Brown	6		30 V DC, 0.5 A [3]
Green	7	+	Digital In 0
Yellow	8	-	0 ... 30 V DC [2]
Black	9	+	Analog Out 0
Violet	10	-	30 V DC, 24 mA [3]
Grey - pink	11	+	Analog Out 1
Red - blue	12	-	30 V DC, 24 mA [3]
White - green	13	Modbus D1 (RxD/TxD_N)	RS 485 (Modbus) -7 ... + 12 V DC
Brown - green	14	Modbus D0 (RxD/TxD_P)	
White - yellow	15	Shield Modbus	

Conductor color	Connector position (Receiver junction board)	Remarks	Function
White - grey	20	+	Analog In 0
Grey - brown	21	-	0 ... 30 mA, 120 Ω [2]
White - pink	22	+	Analog In 1
Pink - brown	23	-	0 ... 30 mA, 120 Ω [2]
Yellow - brown	Chassis	PE terminal	
Shield	Gland	PE terminal	

1) Maximum possible power consumption.
2) Maximum input values.
3) Maximum output values. The following figures show how the outputs are used.
4) Supported relay modes: "Normally Energized" (default), "Normally De-Energized".

The electric connections for the transmitter junction box cable, valid for the SITRANS SL variant for IECEx based standards as delivered from June 2018 on to be identified by a cable gland with red cap are the same as for the former versions.

Table 2-6 Electric connection for PROFIBUS connection cable

Conductor color/no.	Connector position (Receiver junction board)	Remarks	Function
1 (black)	1	+	Supply voltage 19 ... 30.2 VDC, ≤10 VA
2 (black)	Chassis		
Red	13	A line	RS 485
Green	14	B line	communication
3 (black)	2	-	Supply voltage 19 ... 30.2 VDC, ≤10 VA
4 (black)	Chassis		
Shield wire	15	PROFIBUS shield	

Example: Digital out 0

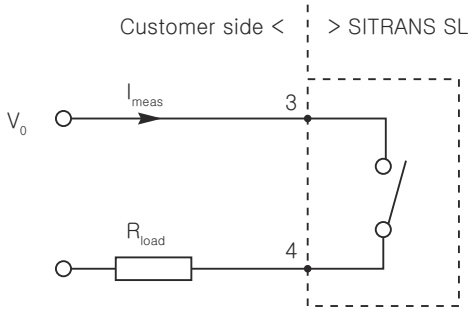

Figure 2-7 Using digital output

- V_0 can be maximum 30 V DC.
- R_{load} must be minimum 60 Ω (max. 0.5 A in the relay).

Example: Analog out 0

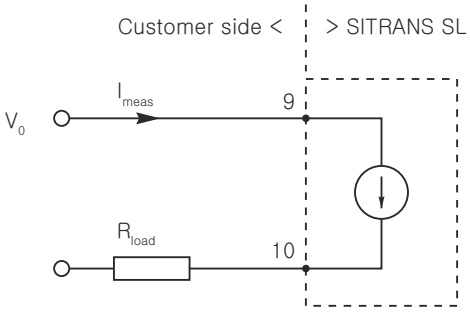

Figure 2-8 Using analog output

- V_0 must be minimum 7.5 V DC and maximum 30 V DC.
- R_{load} can be maximum ((V_0 – 7.5 V)/0.025 A) Ω.

Note

The analog outputs of the SITRANS SL are passive and thus must be powered externally!

See also

Screw terminals (Page 82)
Setup (Page 134)

2.5.4 FM/CSA

2.5.4.1 Safety information

Electric safety

The SITRANS SL FM/CSA version is delivered with an approval for use in hazardous environments in which explosive gases are in use.

⚠ WARNING

Danger of explosion due to open cable inlet or incorrect cable gland

Close the cable inlets for the electric connections. Only use cable glands or plugs which are approved for the type of protection "Flameproof enclosure Ex d".

When using a conduit system, you must provide an ignition lock-out at a maximum distance of 46 cm (18") from the device inlet. Screw in the conduit with at least four turns of the thread.

Observe the specifications and laws with regard to the installation location of the device.

⚠ WARNING

Danger of explosion due to remaining capacitor loads

Before opening the device wait at least two minutes after de-energizing. Make sure that externally powered signals are also de-energized.

⚠ WARNING

Danger of explosion

Never open the cover of an energized SITRANS SL system in the hazardous area without permission of the plant manager (hot work permit).

Death, personal injury and/or damage to property may result if this is not observed.

⚠ WARNING

Danger of explosion due to insufficient reconnection

Before switching on the analyzer make sure that the housing is closed and grounded.

The protective earth terminal of the SITRANS SL needs to be connected to the local potential equalization system.

Death, personal injury and/or damage to property may result if this is not observed.

Special conditions for safe use

Always consult the manufacturer for dimensional information on the flameproof joints in case of repair.

The painted surface of the SITRANS SL may be subject to electrostatic charge and thus become a source of ignition in applications with a low relative humidity of less than 30 %

when the painted surface is free of any surface contamination such as dirt, dust or oil. If necessary clean the painted surface only using a damp cloth.

The SITRANS SL analyzers used for process measurement and control shall not measure oxygen concentrations greater than 21%.

WARNING

Unsuitable accessories for the hazardous area

The use of the alignment kit (optional) for aligning the sensors is not covered by the certificate for the use of the analyzer in hazardous areas.

The use of the verification kit (optional) for verifying or calibrating the sensors is not covered by the certificate for the use of the analyzer in hazardous areas.

- These devices must only be used in an atmosphere without any risk of explosion (hot work permit)!

WARNING

Damage to personal, material and/or environment

Fix the safety mechanism for the lid.

WARNING

Loss of FM approval

Never repair the device on site!

Any components not mentioned in the spare parts list must be replaced or repaired by certified field service technicians. Failure to do so will also result in loss of FM approval.

SITRANS SL FM/CSA meets all regulations specified in the present EU regulations (Electromagnetic compatibility EMC 2014/30/EU, ATEX regulation 2014/34/EU as well as the regulations of the American market (FM/CSA).

Materials in the sensor pair

The sensor pair (transmitter and receiver) is built mainly using stainless or surface treated steel and aluminum 231 (maximum magnesium content 0.5%) and an O ring made of FKM or FFKM.

Pressure Safety

In some applications the process can be over-pressurized. Normally this is not a situation where the measurements will be adequate.

NOTICE

Material damage

The high-pressure glass in the sensors must not be subject to any mechanical impact which might cause damage to the glass (scratch, gash etc.). Only use a soft cloth for cleaning of the glass. Make sure that it is safe to dismount the sensor before cleaning.

NOTICE
Material damage Make sure all plugs and tube fittings are sealed with the enclosed pipe thread Sealant (Swagelok MS-PTS-6). (Instructions given on the sealant tube must be carefully followed).

Approval

The concept of the FM approval is that the system is not modified and that special FM approved cables and bushings are used. An absolute condition for the approval is that the equipment is set up according to FM/CSA system set-up (Page 37).

Liability

Following commissioning, the total responsibility is with the owner.

2.5.4.2 Installation of the FM/CSA version of SITRANS SL

The installation of the FM/CSA sensors can be performed by the customer provided the instructions given in the certificate are fully observed.

Note

The FM certificate or CSA certificate is a system certificate and is only valid if SITRANS SL is installed according to the instructions given in the certificate.

Note

SITRANS SL must be shut off and disconnected before reconnections are done.

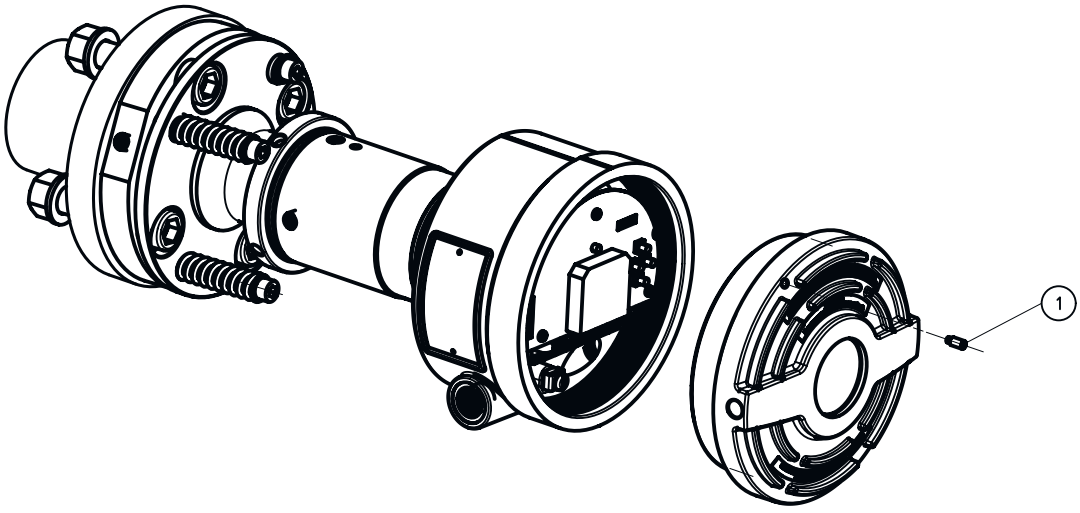

① Sensor housing lid locking screw

Figure 2-9 SITRANS SL FM installation

⚠ CAUTION

Loss of approval

The locking screw must be tightened.
Failure to do so will also result in a loss of the FM approval.

2.5.4.3 FM/CSA system set-up

Note

The FM/CSA version of the SITRANS SL is delivered without cables.

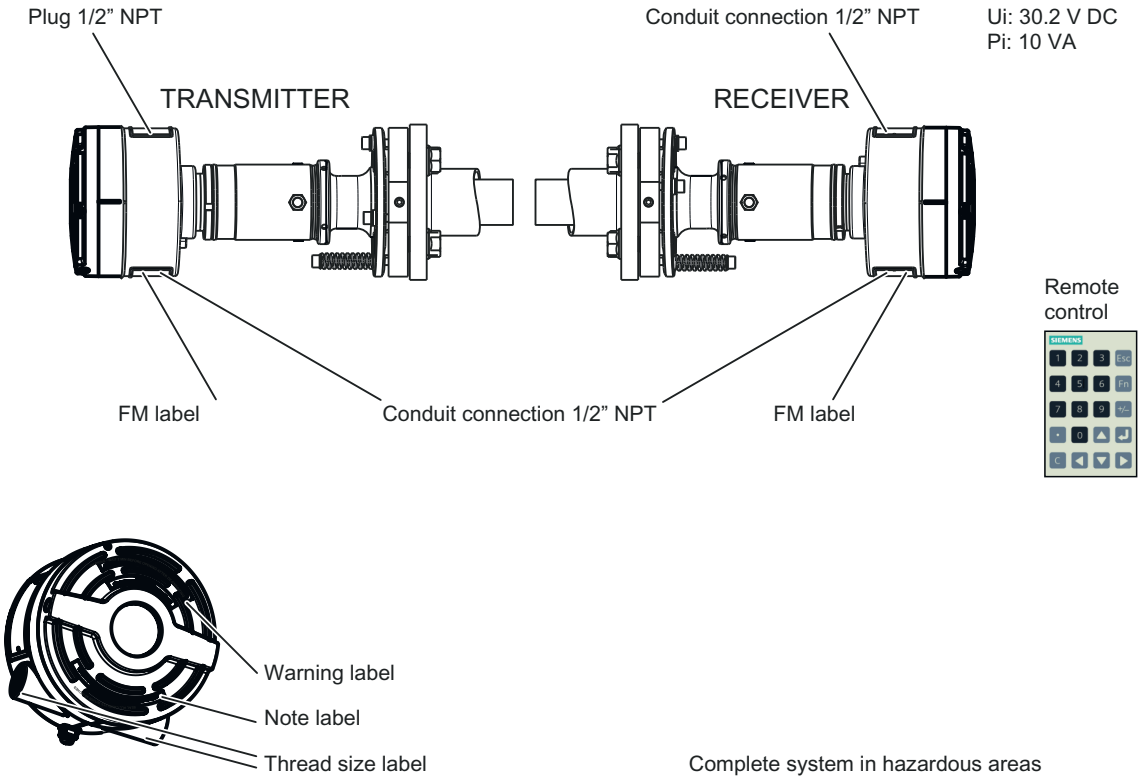

Figure 2-10 Overview of the SITRANS SL FM/CSA version

Make sure that the receiver junction box cable between the junction box and the receiver has a minimum length of 1.5 meter (5 ft) since it will be used as sensor connection cable when the calibration of SITRANS SL is verified. In this process the end in the junction box will be mounted in the transmitter and the cable length must be sufficient to mount the sensors and the calibration verification module as described in the FM/CSA verification section.

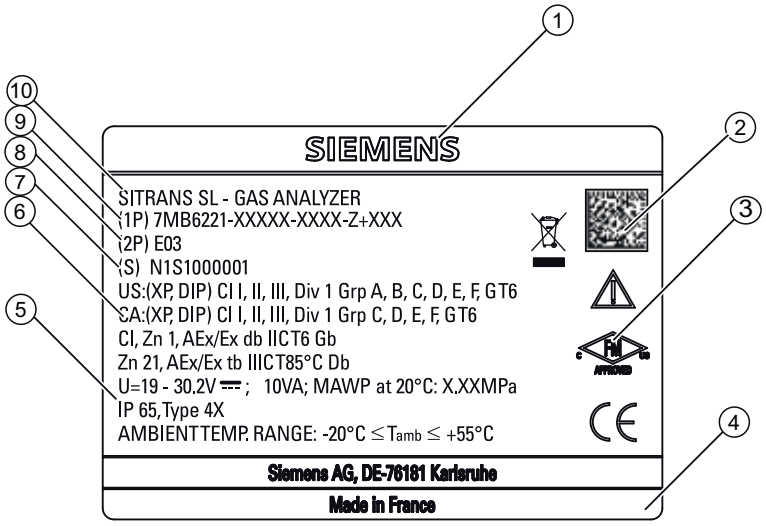

①	Manufacturer	⑥	FM/CSA data
②	Datamatrix code	⑦	Serial number
③	FM marking	⑧	Product version
④	Country of origin	⑨	Article number
⑤	Measuring range	⑩	Product name

Figure 2-11 Example: SITRANS SL FM nameplate



Figure 2-12 Warning_label

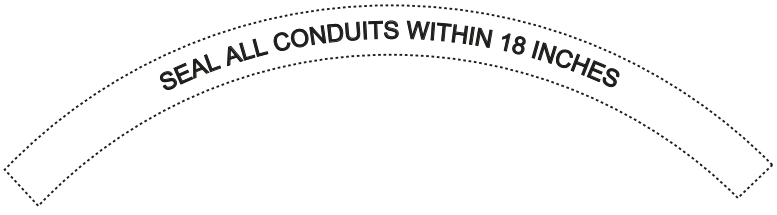

Figure 2-13 Note label SITRANS SL



Figure 2-14 Thread size label SITRANS SL

See also:Verification of systems used in hazardous areas (Page 182)

2.5.4.4 Electric connections in the FM/CSA system

The electric connections are done in the receiver and transmitter respectively. The tables below illustrate the connections in the receiver and the transmitter. The terminals as well as their assignments are described in section Screw terminals (Page 82).

Sensor connection

The sensor connection connects receiver and the transmitter of the SITRANS SL. The sensor connection is used to transfer:

- 100 kbps RS-485 communication
- power for the transmitter
- ground.

Table 2-7 Electric connections for sensor connection, valid for FM/CSA product versions

Screw terminals on junction board			Function / Power
Receiver	**Transmitter**		
L1	S1	+	24 V DC power supply to transmitter unit
L2	S2	-	
L3	S3	Com+	RS 485 communication
L4	S4	Com-	
L5	S5	Sync+	
L6	S6	Sync-	
Chassis	Chassis		Ground
Gland	Gland		Ground

Connection cable

Table 2-8 Electric connections for connection cable analog and Modbus, valid for FM/CSA product versions

Terminals in receiver junction board		Function/Power	Ethernet cable
1	+	Supply voltage 19 ... 30.2 V, 10 VA [1]	
2	-		
3	Closed when energized [4]	Digital OUT 0 (relay) 30 V, 0.5 A [3]	
4			
5	Closed when energized [4]	Digital OUT 1 (relay) 30 V, 0.5 A [3]	
6			
7	+	Digital IN 0 0 ... 30 V [2]	
8	-		
9	+	Analog OUT 0 (Measurement) 30 V, 24 mA [3]	
10	-		
11	+	Analog OUT 1 (Measurement) 30 V, 24 mA [3]	
12	-		

Terminals in receiver junction board			Function/Power	Ethernet cable
13	PROFIBUS A-Line (RxD/TxD_N - data inverted)	Modbus D1 (RxD/TxD_N - data inverted))	RS-485 (PROFIBUS [5] / Modbus) - 7 ...+ 12 V DC	
14	PROFIBUS B-Line (RxD/TxD_P - data not inverted)	Modbus D0 (RxD/TxD_P - data not inverted)		
15	PROFIBUS / Modbus shield			
16	Tx+		Ethernet [6]	White/Orange
17	Tx-			Orange
18	Rx+			White/Green
19	Rx-			Green
20	+		Analog IN 0 (Temperature) 0 .. 30 mA, 120 Ω [2]	
21	-			
22	+		Analog IN 1 (Pressure) 0 ... 30 mA, 120 Ω [2]	
23	-			
24			Ground	
25			Ground	
Chassis			Ground	
Gland			Ground	Shield

1) Maximum possible power consumption.

2) Maximum input values.

3) Maximum output values. The following figures show how the outputs are used.

4) Supported relay modes: "Normally Energized" (default), "Normally De-Energized". For configuration, see section Setup (Page 134).

5) Certified PROFIBUS wiring recommended, see section PROFIBUS DP interface (Page 147)

6) We recommend not to connect the connection cable directly to Ethernet connectors. Instead the sensor connection cable kit should be used for this purpose.

Example: Digital out 0

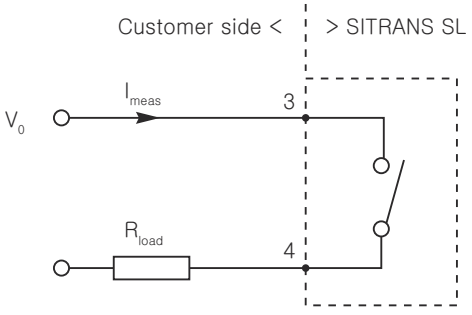

Figure 2-15 Using digital output

- V_0 can be maximum 30 V DC.
- R_{load} must be minimum 60 Ω (max. 0.5 A in the relay).

Example: Analog out 0

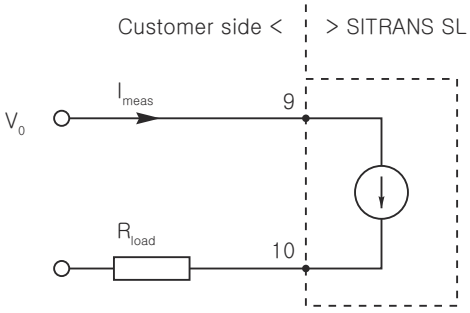

Figure 2-16 Using analog output

- V_0 must be minimum 7.5 V DC and maximum 30 V DC.
- R_{load} can be maximum ((V_0 – 7.5 V)/0.025 A) Ω.

Note

SITRANS SL provides no supply voltage for the analyzer outputs, i.e. the analog outputs of the SITRANS SL are passive and thus must be powered externally!

See also

Screw terminals (Page 82)

Description

3

3.1 Overview

SITRANS SL is a diode laser gas analyzer with a measuring principle based on the specific light absorption of different gas components. SITRANS SL is suitable for fast, non-contact measurement of gas concentrations in process or flue gases. An analyzer consisting of transmitter and receiver unit (sensors) is used for each measuring point. The hardware for further processing of the measured signal into a concentration value, as well as the monitoring, control and communication functions, are integrated in these two main modules. The sensors are designed for operation under harsh environmental conditions.

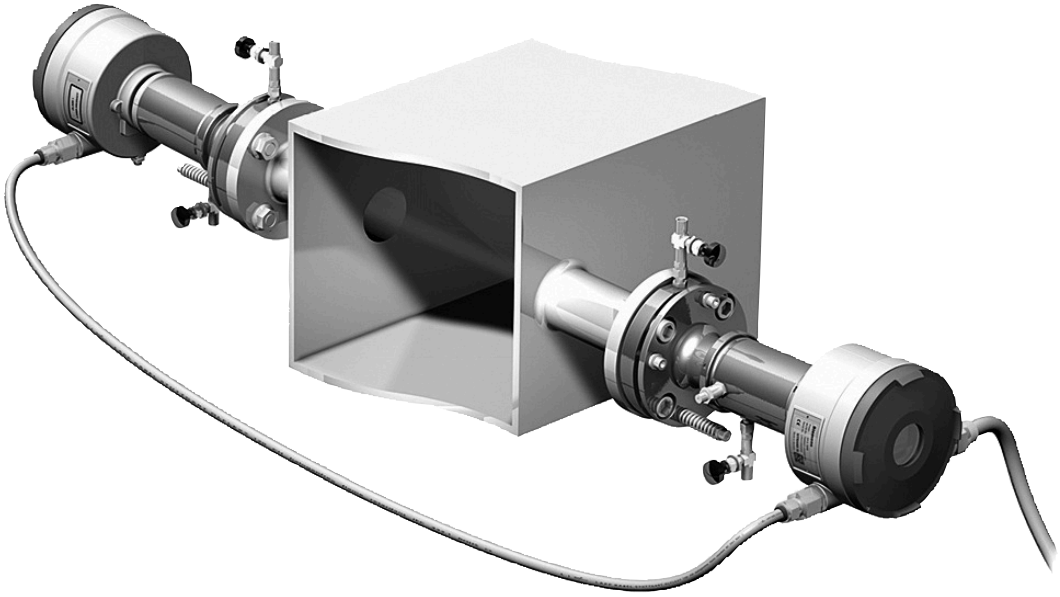

Figure 3-1 SITRANS SL, typical setup

3.2 Benefit

The in-situ SITRANS SL gas analyzer features high operational availability, unique analytical selectivity, and a wide range of possible applications. SITRANS SL permits measurement of a gas component directly in the process:

- With high dust load
- In hot, humid, corrosive, explosive, or toxic gases
- In applications showing strong varying gas compositions
- Under harsh environmental conditions at the measuring point
- Highly selective, i.e. mostly without cross-sensitivities

Special features of the SITRANS SL:

- Little installation effort
- Minimum maintenance requirements
- Extremely rugged design
- High long-term stability through built-in, maintenance-free reference gas cell
- Real-time measurements

Moreover, the analyzer provides warning and error messages:

- When maintenance is required
  - With large variations in the reference signal
  - With poor signal quality
- If the transmission violates an upper or lower limit

3.3 Range of application

Sections

- Chemical and petrochemical plants
- Power plants
- Waste incinerators
- Iron and steel industry

Applications

- Control of combustion processes
- Process optimization
- Plant and operator safety

- Process measurements in all types of power and combustion plants
- Process control
- Explosion protection
- Measurements in corrosive and toxic gases
- Quality control

3.4 Design

The SITRANS SL gas analyzer consists of a pair of cross-duct sensors - a transmitter unit and a receiver unit - both with the same dimensions. The complete analyzer is integrated in these two enclosures (pos. 1 and 7, fig. 2.2). The transmitter unit contains the laser source which light is transmitted to the receiver through the measurement path. The receiver unit contains a photodetector including electronics as well as a reference cell. The receiver unit is connected to the transmitter unit by means of a sensor connection cable. The connection cable of the receiver is used to connect the power supply and the communication interfaces. The receiver enclosure contains a local user interface (LUI) with an LC display which can be read through a window in the lid. The LUI is normally operated via a remote control panel.

3.4.1 Transmitter and receiver units

Special features of the transmitter and receiver units:

- Two in situ cross duct sensors, designed as transmitter and receiver units, connected via sensor connection cable
- Process interface which
  - consists of identical assemblies for transmitter and receiver
  - is the interconnection between the transmitter/receiver units and the process
- Powder-coated aluminium; stainless steel
- Degree of protection IP65
- Adjustable flanges
- Suitable for a flange connection to DN50/PN10-40, ANSI 4"/150 lbs
- Purging facilities on the process and the sensor sides, configurable application with purging gas connections

Non Ex version and sensor connection cable kit

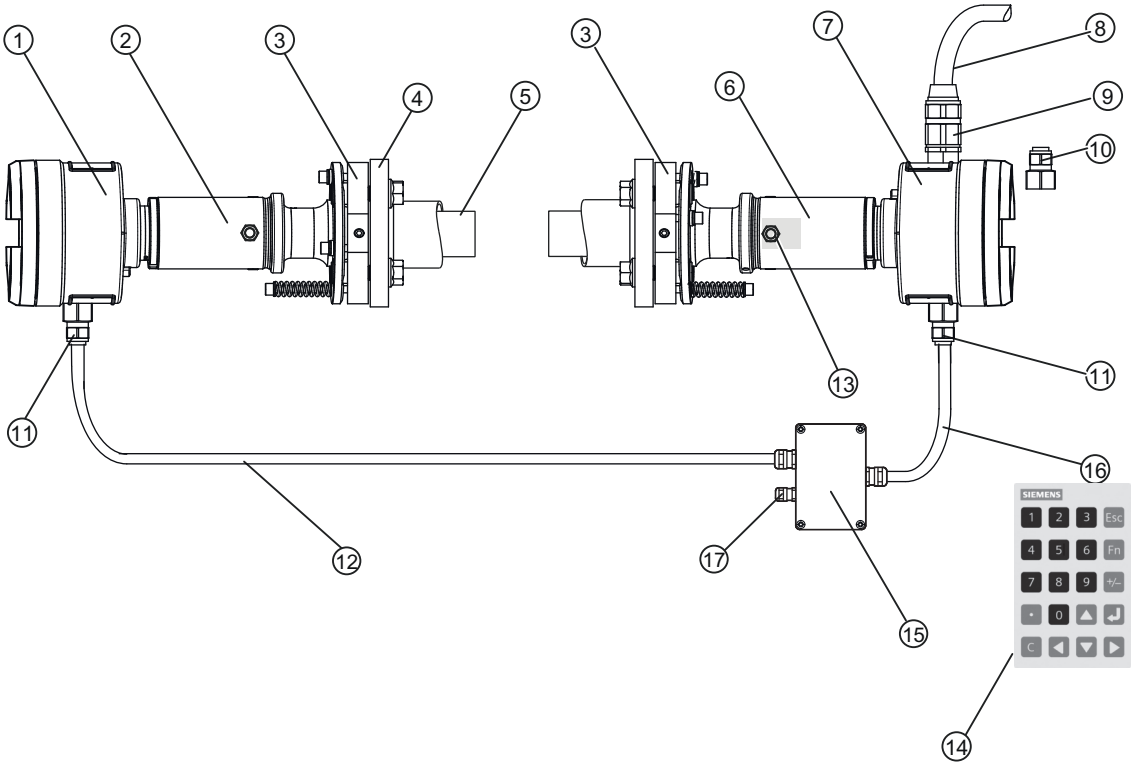

①	Transmitter housing	⑨	Large cable gland (for cables with a diameter of 13 ... 18 mm)
②	Transmitter tube unit	⑩, ⑪	Small cable gland (for cables with a diameter of 8 ... 12 mm)
③	Process interface	⑬	Reference cell inside the receiver unit
④	Customer flange (not included)	⑭	Remote control
⑤	Purging tube (accessory)	Sensor connection cable kit (accessory), consisting of	
⑥	Receiver tube unit	⑫	Sensor connection cable
⑦	Receiver housing	⑮	Receiver junction box
⑧	Connection cable (accessory)	⑯	Receiver junction box cable
		⑰	Cable gland for Ethernet cable

Figure 3-2 Connection of a non Ex system with the sensor connection cable kit (accessory)

The sensor connection cable is used to connect the transmitter unit to the receiver unit. This can be done either directly, or via a receiver junction box (see preceding figure). A sensor connection cable kit is available as accessory.

Version for IECEx based standards

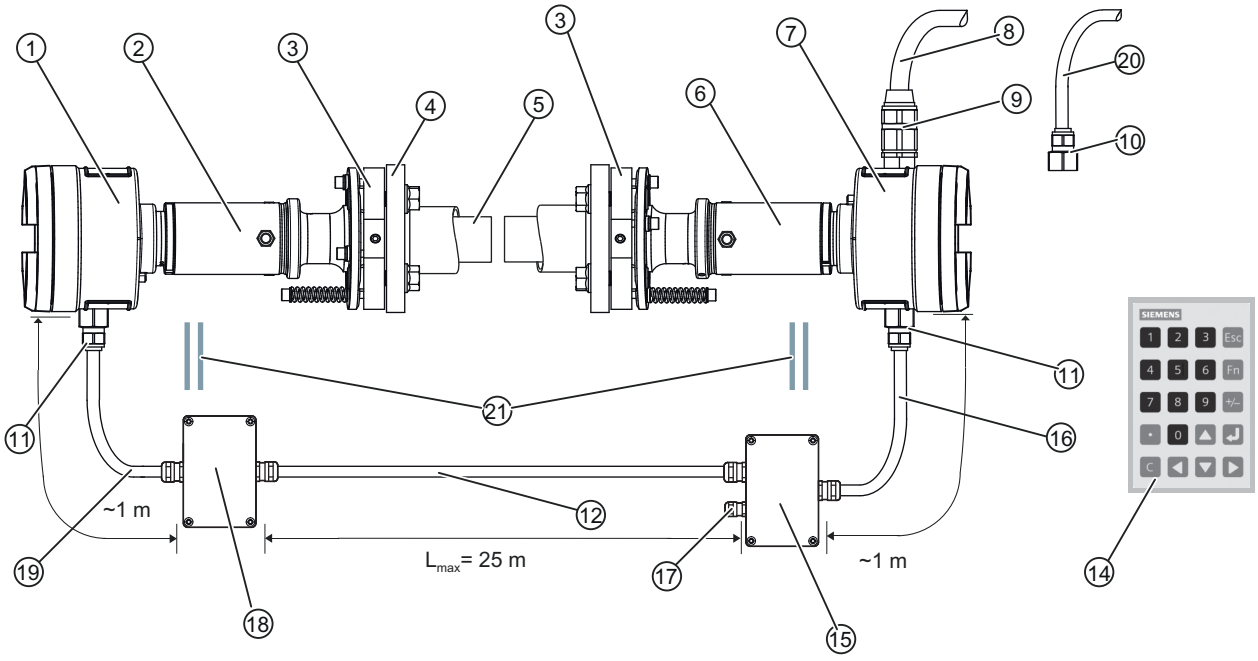

① Transmitter housing
② Transmitter tube unit
③ Process interface
④ Customer flange (not included)
⑤ Purging tube (accessory)
⑥ Receiver tube unit
⑦ Receiver housing

Connection cable solution - Analog I/O, Modbus:

⑧ Connection cable
⑨ Ex cable gland

Connection cable solution - PROFIBUS DP

⑳ Connection cable
⑩ Ex cable gland

⑪ Ex cable gland
⑫ Sensor connection cable
⑭ Remote control

Receiver junction box kit, consisting of

⑮ Ex-e receiver junction box
⑯ Receiver junction box cable
⑰ Cable gland for Ethernet cable

Transmitter junction box kit, consisting of

⑱ Ex-e transmitter junction box
⑲ Transmitter junction box cable

㉑ Mounting bracket for junction box

Figure 3-3 Design of the SITRANS SL variant for IECEx based standards

See also

Electric connections in the SITRANS SL variant for IECEx based standards (Page 28)
Electric connections in the FM/CSA system (Page 40)

3.4.2 Display and control panel

Special features of the receiver unit:

- Display for simultaneous output of result and device status.
- LED backlighting of display.
- Menu-driven operation for parameterization and diagnostics.
- Remote operation via infrared interface for safe use in hazardous zones.
- Remote control using membrane keypad and softkeys which are easy to clean.



Figure 3-4 Local user interface (LUI) of SITRANS SL in the receiver unit (display of measured value)



Figure 3-5 Remote control keypad for SITRANS SL

3.4.3 Cables for connection

- The SITRANS SL is normally delivered without cabling, except for the variant for IECEx based standards.
- For non-Ex versions the accessory "sensor connection cable kit" is used to connect the transmitter and receiver unit of the analyzer, while the connection cable is needed to connect the SITRANS SL electrically to your process control system. All materials used are flame-retardant.
- A sensor connection cable kit is available as an accessory and provides the sensor connection cable, i.e. the cable connecting receiver and transmitter of the SITRANS SL. The sensor connection cable is available in lengths of 5 m, 10 m or 25 m length according to your order.
- The sensor connection cable kit also provides the possibility of a permanent installation of an Ethernet cable.
- A protective hose should be used as UV protection for installations in open cable ducts or channel systems. It is available as an accessory.
- The statutory directives must be observed in the event of installation in hazardous areas.

For cable specifications refer to section Cable selection recommendations (Page 62)

Electrical connections in the variant for IECEx based standards

- The system is delivered with pre-mounted cables. The connections inside the unit housings are set up in the factory before delivery and modifications can only be done by certified technicians.
- The junction boxes mounted to the receiver and the transmitter provide connections for the sensor connection and the Ethernet cables.
- An Ex-e classified junction box is required to install the connection cable to your process control system. A suitable junction box is available as an accessory (not represented in the figure above).
- The sensor connection cable (⑫, fig. 2.3) is delivered with unprepared ends. It has to be prepared according to section Electric connections in the SITRANS SL variant for IECEx based standards (Page 28).
- The SITRANS SL variant for IECEx based standards is delivered with a sensor connection cable of the ordered length. This sensor connection cable must be connected between the Ex-e junction boxes mounted on the receiver and the transmitter.
- All cable kits are part of the delivery and can be ordered separately as spare parts.

See also

Transmitter and receiver units (Page 46)

3.4.4 Inputs/outputs

- 2 analog inputs (4 to 20 mA) for process gas temperature and pressure
- 2 analog outputs (4 to 20 mA) for gas concentration or for concentration and transmission
- 1 configurable binary input for quality information of external sensor
- 2 freely configurable binary outputs (display of faults, maintenance request, function monitoring, alarms for limit violations of measured value or transmission)
- Optional: 1 PROFIBUS DP interface with:
  - Output of gas concentration as cyclic data
  - Alarm output, alarm classification
  - Input for temperature and/or pressure data for compensation

  The PROFIBUS DP protocol provides DPV0, cyclic data. Measured values are provided with additional quality data.

  Note

  The PROFIBUS DP hybrid cable provides an unused pair of wires to connect one of the analog or binary inputs or outputs mentioned above.

- Optional: 1 Modbus interface with:
  - Output of gas concentration as cyclic data
  - Alarm output, alarm classification
  - Input for temperature and/or pressure data for compensation
- 1 Ethernet 10Base-T port, only for service and maintenance. Using Ethernet, the analyzer supports the following software:
  - LDSComm (PC software for service and maintenance engineers)
  - SITRANS SL updater (PC software for service engineers)

  Note

  For the non-Ex version the junction box of the sensor connection cable kit is required for permanent installation of an Ethernet cable.

  ⚠ WARNING

  In hazardous environments, all electric cables may only be connected or disconnected with the permission of the plant manager (hot work permit)!

3.5 Functional description

3.5.1 Operating principle

SITRANS SL is a gas analyzer employing single line molecular absorption spectroscopy. A diode laser emits a beam of infrared light which passes through the process gas and is detected by a receiver unit. The wavelength of the laser diode output is tuned to a gas specific absorption line. The laser continuously scans this single absorption line with a very high spectral resolution (see following figure). The degree of absorption and the line shape are used for the evaluation. The measurement is free of cross-interferences, since the quasi-monochromatic laser light is absorbed very selectively by only one specific line in the scanned spectral range.

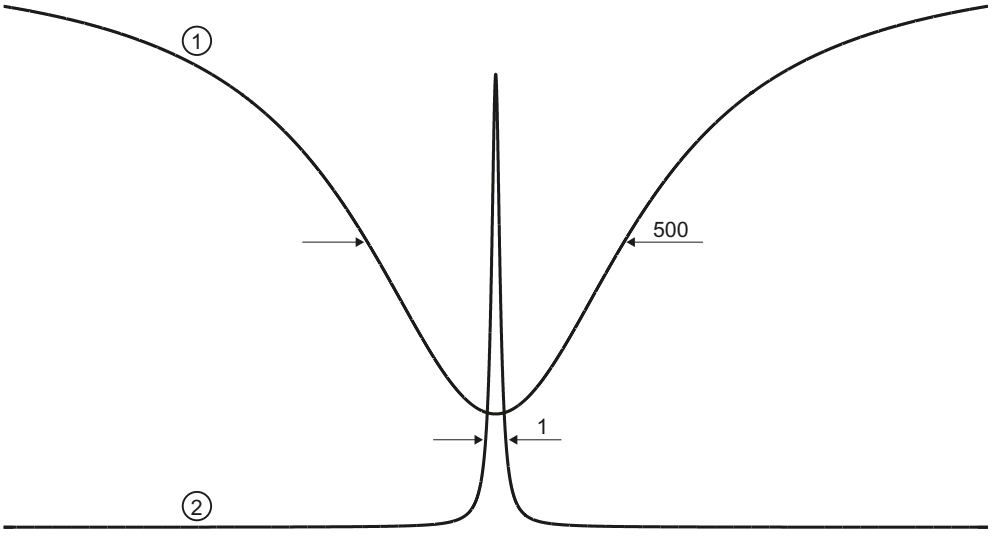

① Absorption line
② Laser line

Figure 3-6 Typical spectral bandwidth of an absorption line compared to the bandwidth of the laser light.

The field design of the SITRANS SL in-situ gas analyzer consists of a transmitter unit and a receiver unit. The light which is not absorbed by the sample is detected in the receiver. The concentration of the gas component is determined from the absorption.

The individual dependencies of concentration, pressure and temperature are application specific.

An internal reference cell is used to constantly check the stability of the spectrometer, thus assuring a continuous self-calibration of the analyzer.

The self-calibration of the analyzer is therefore valid for the time period specified in the technical data without the necessity for external recalibration using calibration gases.

Configuration

The main feature of the in-situ analytical procedure is that the physical measurement takes place directly in the stream of process gas and directly in the actual process gas line. All process parameters such as gas matrix, pressure, temperature, moisture, dust load, flow velocity and mounting orientation can influence the measuring properties of the SITRANS SL and therefore must be considered for each new application.

The standard applications listed in the ordering data for the SITRANS SL are distinguished in that the typical process conditions are adequately well-known and documented. If you cannot find your application among the standard applications, please contact Siemens AG. We will be pleased to check your possible individual application of the SITRANS SL.

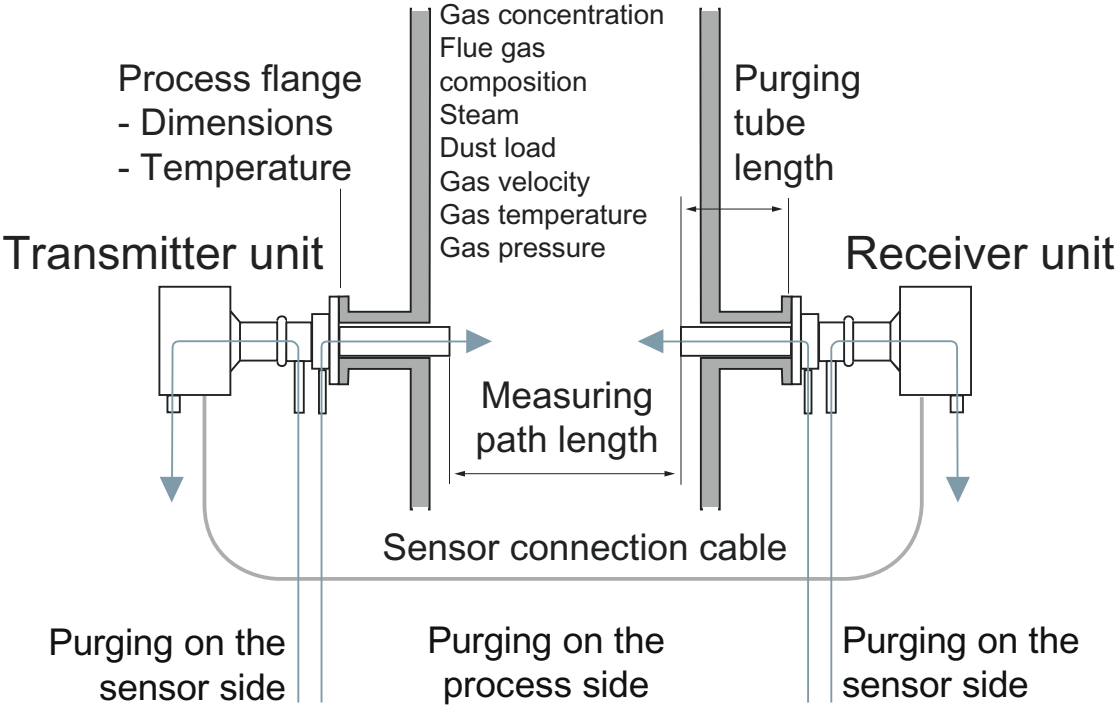

Figure 3-7 Typical cross-duct arrangement of the SITRANS SL

Purging gas flow is used to prevent contamination of the sensor optics on the process side. Purging tubes on the sensor heads, which slightly extend into the process gas stream, define the effective measuring path length.

3.5.2 Influences on the measurement

Dust load

As long as the laser beam is able to generate a suitable detector signal, the dust load in the process gas does not influence the analytical result. By applying a dynamic background correction, measurements can be carried out without any negative impact.

The influence of a high dust load is extremely complex and depends on the optical path length and particle size. The optical damping increases exponentially at longer path lengths. Smaller particles also have a very large influence on the optical damping. With high dust load, long path length and small particle size, the technical support at Siemens AG should be consulted.

Temperature

The temperature influence on the absorption line is compensated by the software. A temperature signal should be fed into the analyzer from an external temperature sensor. The signal is then used for mathematical correction of the influence of the temperature on the observed line strength. If the process gas temperature remains constant, a static correction can be carried out as an alternative. Without temperature compensation, the relative error caused by changes in the gas temperature has an extensive effect on the measurement.

An external temperature signal is recommended in most cases.

Pressure

The process gas pressure can affect the line shape of the molecular absorption line. For known pressure values, the SITRANS SL uses a special algorithm to adapt the line shape. Additionally, an external pressure signal can be fed to the analyzer to provide complete mathematical compensation for the pressure influence including the density effect (depending on application and gas).

An external pressure signal is recommended in most cases.

Interferences

The SITRANS SL is able to measure the desired gas components very selectively. In special cases, the composition of the process gas might have an influence on the shape of the absorption lines. This influence is compensated by analyzing the full shape of the detected signal curve applying specific algorithms.

Optical path length

As a result of Beer-Lambert's law, the absorption of laser light depends on the optical path length within the gas. For this reason the precision of the optical path length measurement has an effect on the precision of the total measurement.

Since the sensor optics on the process side usually shall be purged to keep them clean for a longer period, the extent of the mixed zone between the purging medium and the process gas as well as the concentration distribution of the latter must be considered. In a typical

in-situ installation with an optical path length of several meters, the influence of the purging gas on the effective path length can be ignored.

The path length and dust load are mutually influencing: the higher the dust load in the process, the shorter the max. possible path length.

The transmitter and receiver units are mounted on process flanges provided by the customer. Correct alignment of these flanges must be guaranteed, e.g. by using the optional sensor alignment kit.

Adjustment of the sensor pair

The process flanges of the SITRANS SL must be correctly aligned so that the laser beam generated by the transmitter hits the photodetector in the receiver unit. This is guaranteed in that the transmitter and receiver units have a curved surface integrated in the flanges. The adjustment is carried out by shifting the flanges on these surfaces, through which the symmetry axis is aligned. The axis can be offset by ±1 degree, which means that the process flanges must be welded onto the process wall with at least this accuracy - see following figure.

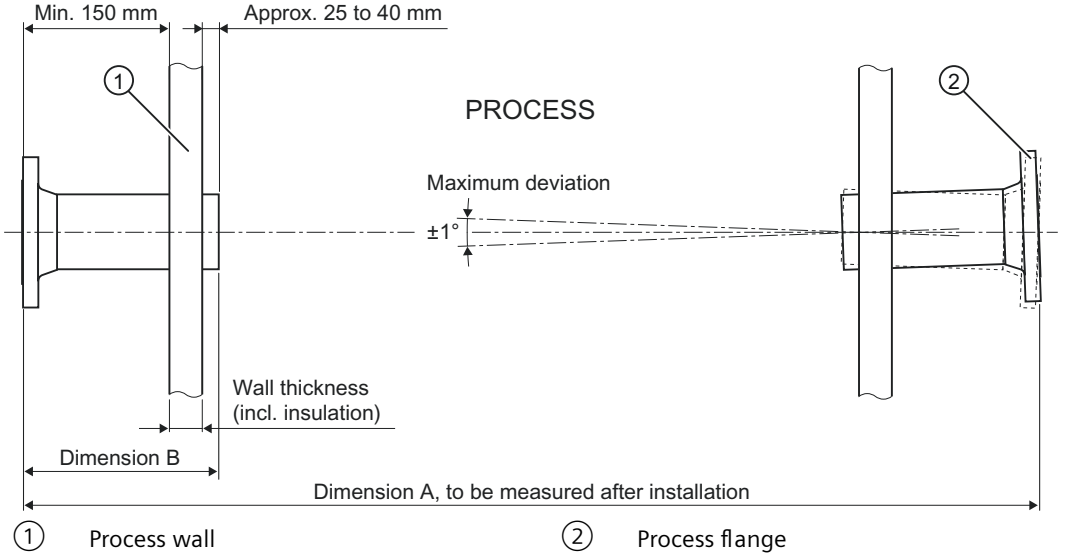

Figure 3-8 Installation adjustment requirements for the pair of cross-duct sensors

Purging

The easiest way to avoid condensation and dust deposits on the sensor windows is to purge them, e.g. with air. Purging must be selected depending on the application. The transmitted-light sensors can therefore be configured for the respective situation.

The purging gas must not contain any concentrations of the measurement component. The presence of the gas in the sensor heads or the purging tubes may influence the measured concentration.

Recommendations for suitable purging and quality requirements of the purging gases can be obtained from chapter Technical specifications (Page 203)

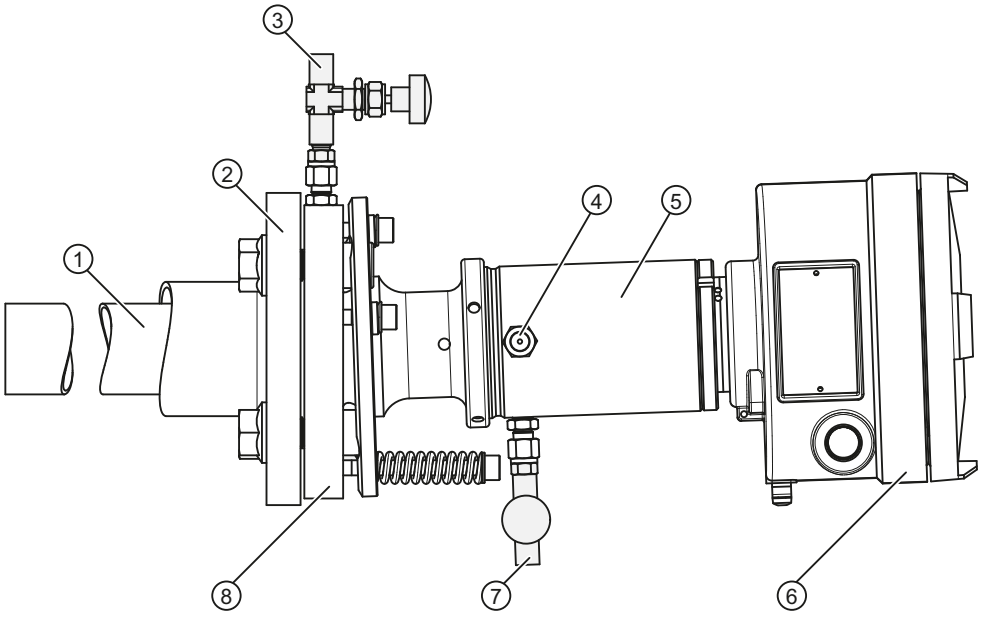

①	Purging tube	⑤	Transmitter or receiver unit: optics tube
②	Process flange (customer)	⑥	Transmitter or receiver unit: sensor head
③	Inlet for purging on the process side	⑦	Inlet for purging on sensor side if applicable
④	Outlet for purging on sensor side if applicable	⑧	Process interface

Figure 3-9 Arrangement for the SITRANS SL sensor purging

Purging on process side

For purging on the process side, the flow of purging gas can be adjusted between 0 and approx. 50 l/min at each sensor head using a needle valve (included in delivery).

Purging tubes

The purging media used on the process side flows through the purging tubes into the process gas stream. The tubes extend into the process area by a few centimeters, usually perpendicular to the process gas stream. The effective measuring path in the process gas is defined as the distance between the ends of the two purging tubes. The standard length of the purging tubes is 340 mm. To enable sufficient pivoting, the process wall should be max. 150 mm thick.

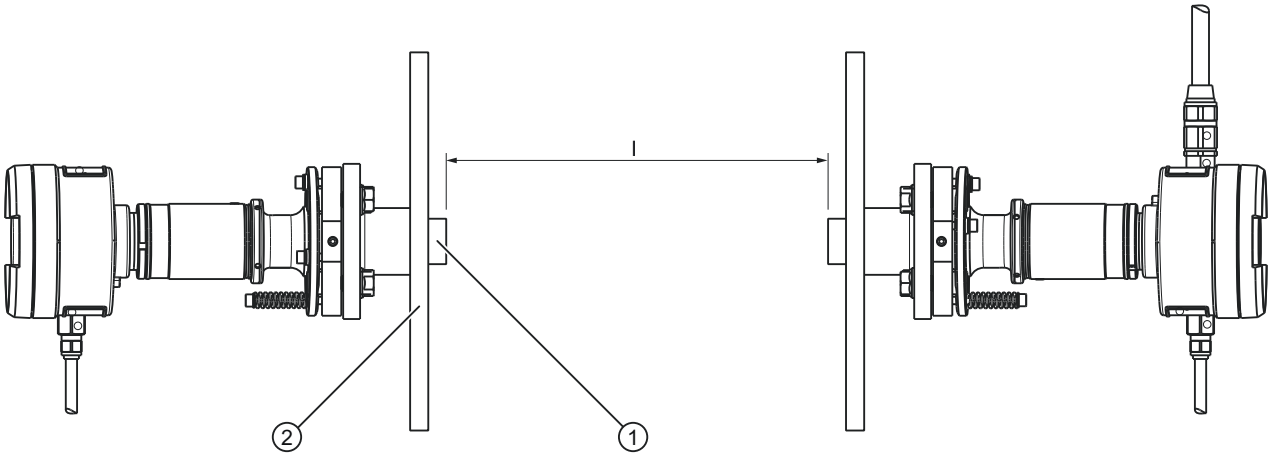

① Purging tube
② Process wall
l Path length

Figure 3-10 Measurement of the optical path length between the ends of the purging gas tubes

Purging on sensor side

Purging of sensors is always required for applications with oxygen as gas to be measured. The sensors are then continuously purged with nitrogen. The flow of purging gas required in this case is stated in the Technical specifications (Page 203).

3.5.3 Maintenance and fault messages

The analyzer carries out continuous self-monitoring, and outputs alarms and warnings to indicate maintenance requirements or a system fault. The information is output as plain text on the LUI display, where symbols identify the category and the severity of the fault.

Alarm categories:

- Maintenance (system must be cleaned or repaired)
- Process value (problem with external sensor, or process conditions outside the permissible range)
- Configuration (analyzer is not correctly configured)

Severity:

- Fault (measurements could not be carried out)
- Warning (measurements may be inaccurate, or the system will soon shut down measuring mode if an intervention is not made)
- Advanced warning/information (measurements are carried out)

The two binary (relay) outputs can be configured freely for the alarm output.

The response of the analog outputs in the event of an alarm is configurable; possible actions are:

- Off (current measured value is displayed)
- Last measured value (freezing of last value displayed)
- Standard level (setting to predefined value)
- 3 mA (Namur NE43 fault status)

In addition, the transmission is available as an output variable.

3.5.4 Essential characteristics

- Long-term stability through use of an internal reference cell; calibration interval at least one year.
- Dynamic background correction for varying dust loads.
- Isolated analog signal outputs of 4 to 20 mA.
- Menu-driven operation.
- Selectable time constants (integration time).
- Password-protected user interface.
- I/O operation in accordance with NAMUR recommendations.
- Monitoring of overall optical transmission.
- Sensor enclosure resistant to wear and corrosion.
- Local operation using remote-control unit with numeric keypad and menu prompting.

3.6 Product characteristics

Device-specific characteristics

SITRANS SL is designed for measurement of various gases. Details can be obtained from chapter Technical specifications (Page 203), analytical performance section.

Transmission

The system will have full performance when the transmission is within the range of 1 to 100 %.

Dust load

The characteristics of the dynamic changes of optical visibility due to dust including turbulences is defined by the measurement situation. The influence of dust on the measurement is very complex and depends on the path length and particle size distribution, which in many cases is not known. For this reason no general limit for a dust load can be given.

However, the SITRANS SL is designed to function without interruptions even at low optical transmission. The experience indicates that the SITRANS SL systems can measure even at quasi-static changes of the received optical power of at least 30 dB. This corresponds under certain conditions to dust loads of up to 100 g/Nm^3 at a path length of 1 m.

Gas analyzer functions

The SITRANS SL can be operated as an independent unit providing the following functions:

- **Output signals**
  The analyzer can output two measurement values:
  - gas concentration and
  - optical transmission level (through the measuring volume).
- **Alarm functions**
  The analyzer provides alarms/warnings for:
  - Transmission drop-off
  - Signal quality (if transmission is not sufficient as quality indicator)
  - Warnings for system deviations before actual error occurs
  - Alarms at system failure.
- **Measurement inputs**
  The analyzer needs to use readings from other sensors to compensate the measured concentration for varying temperature and pressure. If needed for future applications, it is also possible to compensate for interference from another gas component.
- **Local User Interface (LUI)**
  The LUI display is located in the receiver housing unit with a backlit LCD visible through a window in the housing lid. It is operated using the IR remote control. The remote control is safe to use even in a hazardous environment.

Application planning

4

4.1 Preparing electric connection

The device does not have a power switch. For operation you need to install an external power switch with a switching capacity of 1.6 A minimum and a slow-blow fuse with a rating of 1.6 A.

Note

Accessibility

Install the power switch such that it is easily accessible during operation.

4.2 Cable selection recommendations

Cable selection recommendations

Note

- For a normal (non Ex) setup of SITRANS SL the cables are not part of the standard delivery and should be ordered as an accessory.
- An Ethernet cable may be permanently connected via the receiver junction box. Ethernet is needed for service and maintenance work. A permanently connected cable is recommended when the SITRANS SL is located at an inconvenient physical location.
- With the receiver junction box mounted, the Ethernet jack inside the receiver unit may not be used, unless the wires connected to the Ethernet screw terminals inside the receiver housing have first been disconnected.

You can select your cable according to your requirements from the following table for standard non-Ex analyzers SITRANS SL.

- Suitable connection cables shall be selected depending on the electric interface used.
- The connection cable must provide both power and ground to the analyzer.
- Ethernet cables shall be of type CAT-5, or better, with a shield (FTP or STP).

Cabling guidelines		
	Sensor connection cable	**Connection cable**
Shield	Yes, required	Yes, required
Configuration	Twisted Pairs	Twisted Pairs recommended
Number of conductors	• 4 x 2 or • 2 x 2 + 3 (2 pairs for comm. & synch + 3 for power and ground)	• Full connection; analog + Modbus: 10x2 (twisted pair) • PROFIBUS: 1 x 2 + 4 (PROFIBUS DP hybrid cable) • Modbus: 1 x 2 + 3 or 3 x 2 (twisted pair)
Conductor cross section	Minimum 0.34 mm^2 (22 AWG)	Minimum 0.34 mm^2 (22 AWG) (Consider voltage drop for too long cables)
Cable diameter	8 ... 12 mm with provided cable gland	• 8 ... 12 mm with provided small cable gland • 13 ... 18 mm with provided large cable gland

4.3 Network and system integration

4.3.1 Overview

The communication interface of SITRANS SL can be configured for transfer and processing of the measurement data as follows:

- Analog I/O and digital I/O system configuration;
- PROFIBUS DP system configuration;
- Modbus system configuration.

The system configuration of the SITRANS SL is defined according to the communication code within its order number.

Note

Setup of the SITRANS SL can be done via the local user interface LUI, or for service engineers, via the LDSComm software. LDSComm communicates with SITRANS SL via Ethernet using the TCP/IP protocol. The connection can be established locally or via modem dial-in using the remote service kit which is available as accessory.

See also

Cable selection recommendations (Page 62)

4.3.2 Analog I/O and digital I/O system configuration

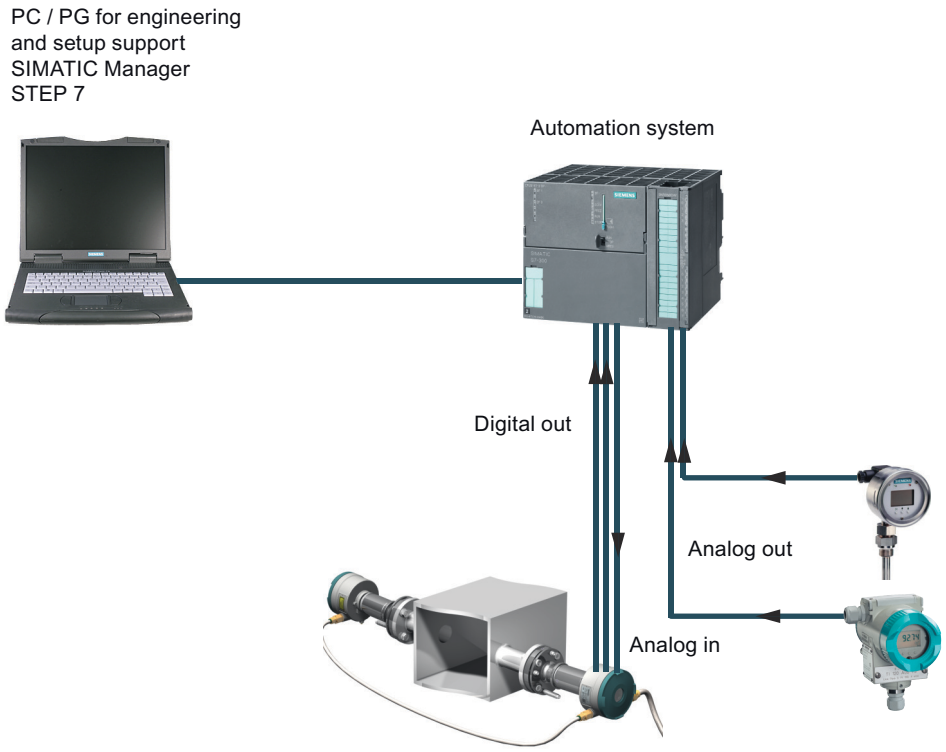

Figure 4-1 Example of a system configuration with analog I/O and digital I/O

System features:

- The SITRANS SL is controlled by the automation system via analog I/O and digital I/O.
- The measurement results of the SITRANS SL are output to the automation system via analog output.
- The digital outputs can be used to indicate warnings and alarms and the digital input can be used to evaluate errors of external pressure or temperature sensors.
- When external sensors are to be connected the first choice is to use analog input of the automation system although direct connection via the analog input of SITRANS SL is also possible.
- A PC/PG used for the configuration of the automation system is connected to an automation system via an MPI cable.

Necessary equipment

Hardware	
Name	**Comment**
SITRANS SL	Analyzer
PLC (e.g. S7-315-2DP)	Automation system
Analog configuration	From automation system to analyzer
Siemens SIMATIC MPI Cable	For PLC configuration
I/O-module (e.g. SM374) – in/out16 (optional)	For connecting external sensors
External sensors (optional)	For process gas temperature and pressure

Software	
Name	**Comment**
Automation system software (e.g. SIMATIC Manager Step 7)	For automation system configuration

4.3.3 PROFIBUS DP system configuration

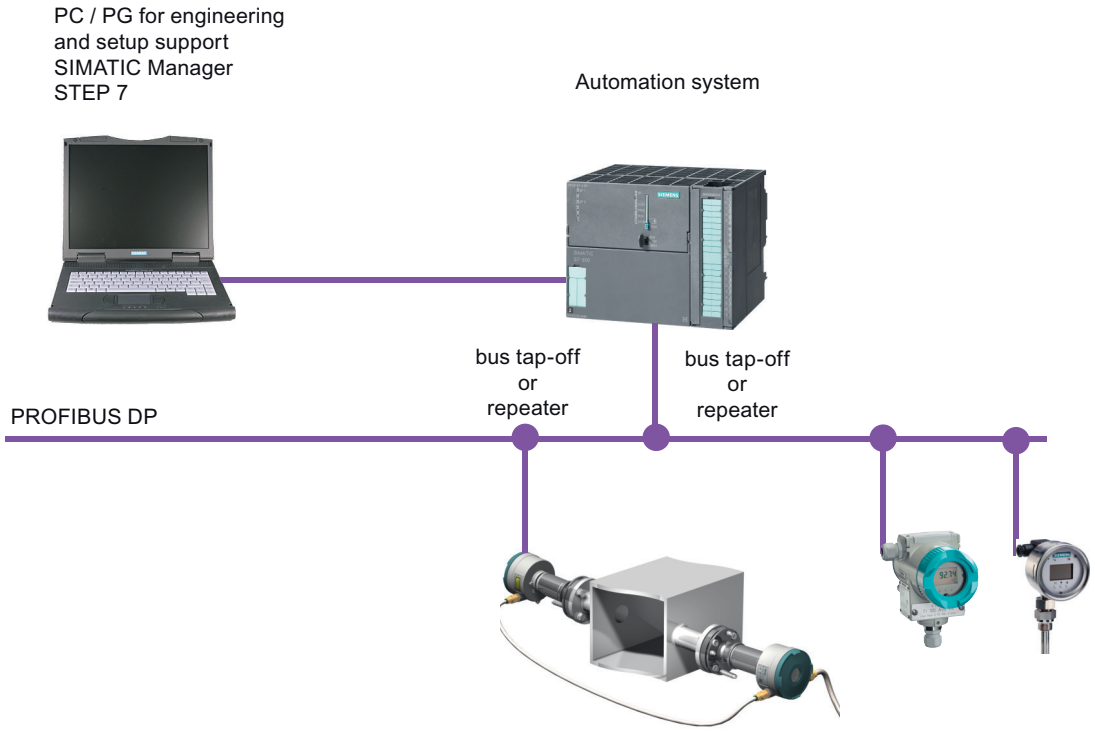

Figure 4-2 Example of a system configuration with PROFIBUS DP

System features:

- The SITRANS SL is controlled by the automation system via PROFIBUS DP.
- The measurement results from the SITRANS SL are output to the automation system via PROFIBUS DP.
- When external sensors are to be connected the first choice to do so is to use PROFIBUS DP although connection via analog input of the automation system is also possible.
- A PC/PG used for the configuration of the automation system is connected to this automation system via an MPI cable.

Necessary equipment

Hardware	
Name	**Comment**
SITRANS SL	PROFIBUS Slave
PLC (e.g. S7-315-2DP)	PROFIBUS Master
PROFIBUS Cable	For PROFIBUS Master – Slave configuration
Siemens SIMATIC MPI Cable	For PLC configuration
External sensors (optional)	For process gas temperature and pressure

Software	
Name	**Comment**
PROFIBUS system software (e.g. SIMATIC Manager Step 7)	For automation system configuration

4.3.4 Modbus system configuration

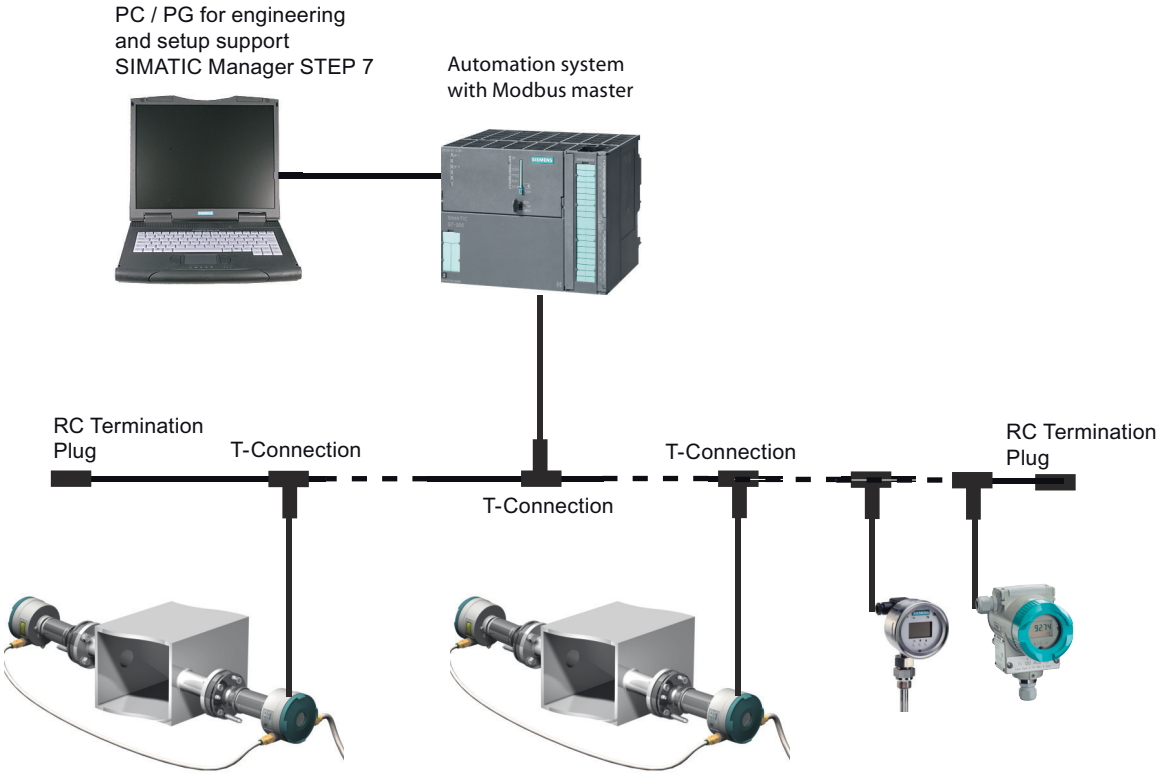

Figure 4-3 Example of a system configuration with modbus

System features:

- The SITRANS SL is controlled by the automation system via Modbus.
- The measurement results of the SITRANS SL are output to the automation system via Modbus.
- When external sensors are to be connected the first choice is to use Modbus although connection via the analog input of SITRANS SL is also possible.
- A PC/PG used for the configuration of the automation system is connected to this automation system via an MPI cable.

Necessary equipment

Hardware	
Name	**Comment**
SITRANS SL	Modbus Slave
PLC (e.g. S7-315-2DP)	Automation system
Modbus module CP442-5	Modbus Master

Hardware	
Name	**Comment**
Modbus Cable	For Modbus Master – Slave configuration
Siemens SIMATIC MPI Cable	For PLC configuration
External sensors (optional)	For process gas temperature and pressure

Software	
Name	**Comment**
Modbus system software (e.g. SIMATIC Manager Step 7)	For automation system configuration

Installation guidelines

5

5.1 Safety information

Electric safety

⚠ WARNING

Death, severe injuries, and/or damage to equipment and environment

It is essential that you observe the given information and warnings!

- Failure to do may result in death, severe injuries, and/or damage to equipment and environment.

The analyzer SITRANS SL meets all regulations specified in the present EU regulations (Electromagnetic compatibility EMC 2014/30/EU) as well as those of the American market (FM approved version available).

Laser safety

⚠ WARNING

Permanent eye damage

Looking directly or indirectly into the laser beam through telescopic optics can lead to permanent eye damage.

To prevent this

• the space between the sensors should be in a closed environment when the device is in operation.

⚠ CAUTION

Unsafe laser emissions

Any opening or removal of device parts would lead to a degraded usage of the device for which the laser class 1 is not anymore guaranteed. Thus, degraded conditions could lead to eyes injuries.

To prevent this

- any device modification by the customer is not allowed.
- any maintenance operation of the device shall be performed only by technicians trained to laser safety.
- Personnel operating the device or working close to its direct environment should be trained to laser safety.



SITRANS SL is classified as a class 1 laser product. The emitted laser light is invisible (near infrared) and not hazardous to the unprotected eye. SITRANS SL has warning labels at appropriate positions according to EN 60825-1:2014.

SITRANS SL is compliant to laser class 1 according to EN 60825-1:2014 but also according to EN 60825-1:2007. Therefore laser class 1 can be used for health and safety evaluation according to Directive 2006/25/EC.

WARNING

Heat safety

Some metal parts and piping placed near the sensors might be at elevated temperatures due to high temperature purging - either from steam or from air.

To avoid severe burns these parts must either be isolated or equipped with protective metal sheets. Always use protective gloves in the vicinity of such hot parts.

WARNING

Unsafe pressure conditions

It is possible to mount the SITRANS SL to processes with elevated pressure. Although the window of the process interface was internally burst-tested up to 8 MPa (80 bar), the customer should define a safety factor appropriate to his application.

- For safety reasons do not exceed the MAWP.

Note

Outdoor cabling

If cables are to be installed outdoors an UV protection shall be considered. A UV protective hose for outdoor use is available as accessory (see list of accessories in Accessories (Page 167))

Liability

Following commissioning, the total responsibility is with the owner.

5.2 Mounting

5.2.1 Mounting conditions

During operation the permissible ambient temperature as stated in the Technical specifications (Page 203) must not be exceeded. If the unit is exposed to direct solar radiation the following cases might occur:

- The total temperature exceeds the maximum permitted temperature. In this case the SITRANS SL must be installed in a cabinet with a controlled environment.
- The user interface will become inoperable. In this case a protective sun shield must be installed.

NOTICE
Avoid condensation As condensation is normally a problem when moving the device from outdoor to the inside of a building, the device should be adapted to the new ambient conditions for a couple of hours before starting it.

Note

The front (lid) side of the units must be accessible. To facilitate maintenance and service there shall be at least 60 cm of free space in front of SITRANS SL transmitter and receiver respectively. To meet the safety requirements for air convection and cooling there must be a free space of at least 10 cm around the SITRANS SL.

Supply voltage

When the supply voltage is interrupted for more than 20 ms the unit performs an automatic restart. **120 sec after the restart** the unit works properly again.
With a slow rise of supply voltage the unit may stop working. A manual restart may be necessary.

5.2.2 Preparations

NOTICE
Risk of damage due to high temperature The temperature on the process side of the wedge window must not exceed 200 °C (392 °F). The maximum permissible temperature of the flange is 70 °C (158 °F). For these applications we recommend a process-side purging with a permanent temperature monitoring.

Before the sensor can be installed at the measurement point, process flanges have to be welded onto the measuring site. The flanges must be compatible with DN50/PN10-40 or

ANSI 4"/150 lbs with a minimum inner diameter of 50 mm. The flanges must protrude at least 150 mm from the wall and 0-30 mm into the furnace or funnel. Flange tubes should never be longer than the purge tube which has a standard length of 340 mm.

If longer flange tubes are needed for any reason customized purging tubes (longer) have to be used. If you require further information, you can request the required information from your Siemens contact person. You will find details of your local contact persons over the Internet. For details see Technical support (Page 216).

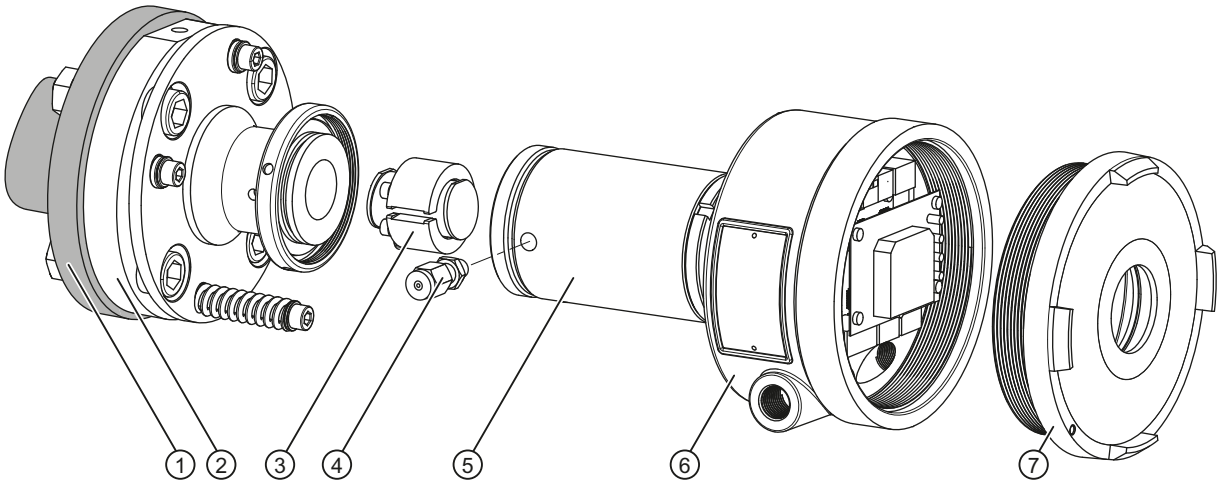

① Customer flange
② SITRANS SL flange
③ In-line reference cell
④ Gas outlet for the sensor purging
⑤ SITRANS SL body (TTU - Transmitter Tube Unit or RTU - Receiver Tube Unit)
⑥ SITRANS SL housing (THU - Transmitter Housing Unit or RHU - Receiver Housing Unit)
⑦ SITRANS SL lid

Figure 5-1 Receiver unit exploded

At installation of the SITRANS SL, the laser and the photo-detector have to be aligned to the optical axis of the sensor pair. Note that each sensor has an optical axis of its own which is its axis of symmetry. In addition the sensor body is at an angle to this axis. The reason for this is that the laser beam passes a wedged window before exiting. This wedge window will refract the beam approximately 1.5°. The following figure illustrates this.

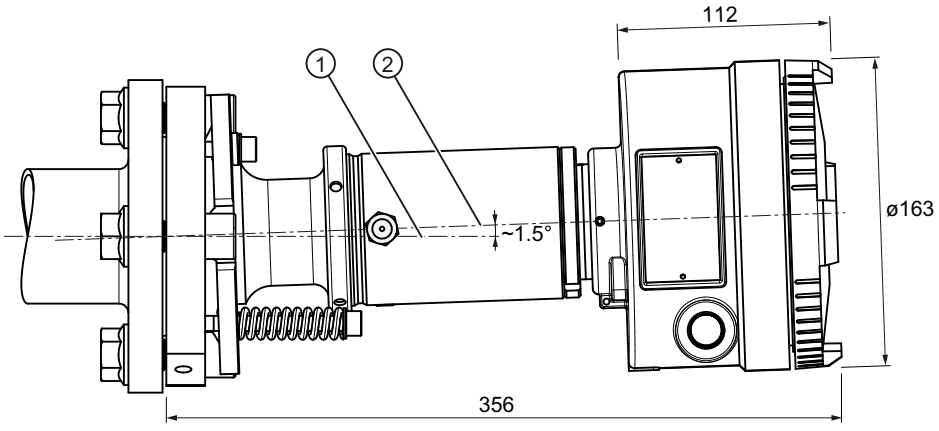

① Axis of symmetry for sensor (optical axis)

② Axis of symmetry for sensor body

Figure 5-2 Symmetry axes

The sensors are equipped with a flange pair called process interface to align both optical axes to one another. In this way an angle error of up to ± 1° on each side can be compensated.

5.2.3 Installation of process flanges

Preparation

The amount to which the axis can be adjusted is ± 1° which means that the process flanges must be welded on the process wall to each other with this accuracy or better - see the following figure.

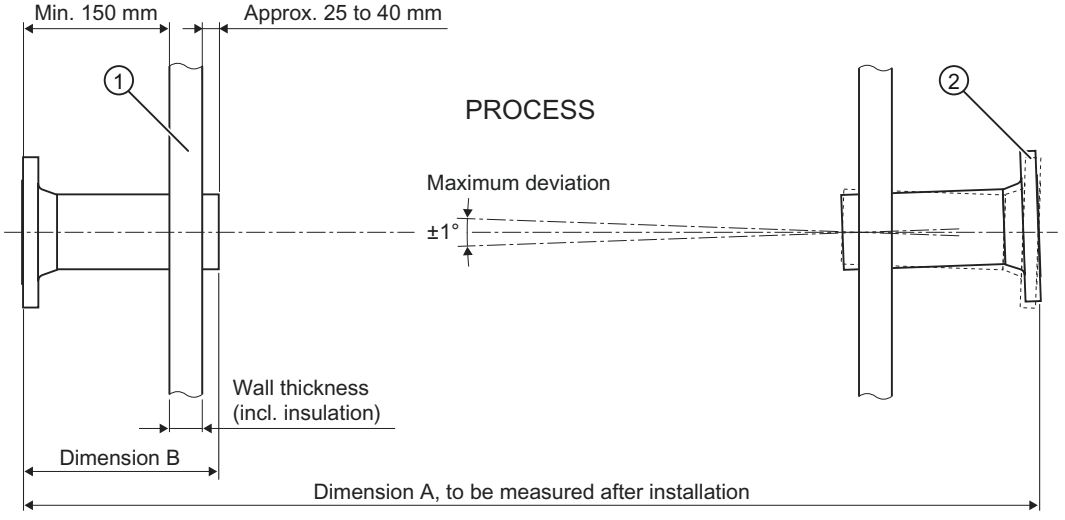

① Process wall

② Process flange

Figure 5-3 Flange alignment

To be able to set the correct path length in SITRANS SL the dimension A in the 'Flange alignment' figure has to be measured after the flanges are mounted. The total length of the purging tube (dimension B), including the process flange must also be known.

The path length can now be calculated as A - 2B.

CAUTION
Alignment error Failure to weld the process flanges within ±1° of the symmetry axis of the flange pair will result in the impossibility to align the sensor pair.

ANSI 4"/150 lbs Process Interface

When using a SITRANS SL analyzer with an ANSI 4"/150 lbs process interface (fabrication no. 7MB6221-xxxxx-xBxx) always make sure to use the right gasket and counterflange. The proper gasket is the one delivered either with the analyzer or as a spare part (A5E02789535). Its dimensions are stated in the following figure. The proper counterflange is the one specified in the operating instructions, its dimensions are quoted there in chapter 'Mounting (Page 73)'. The M16 bolts shall be tightened with a torque of M = 80 Nm.

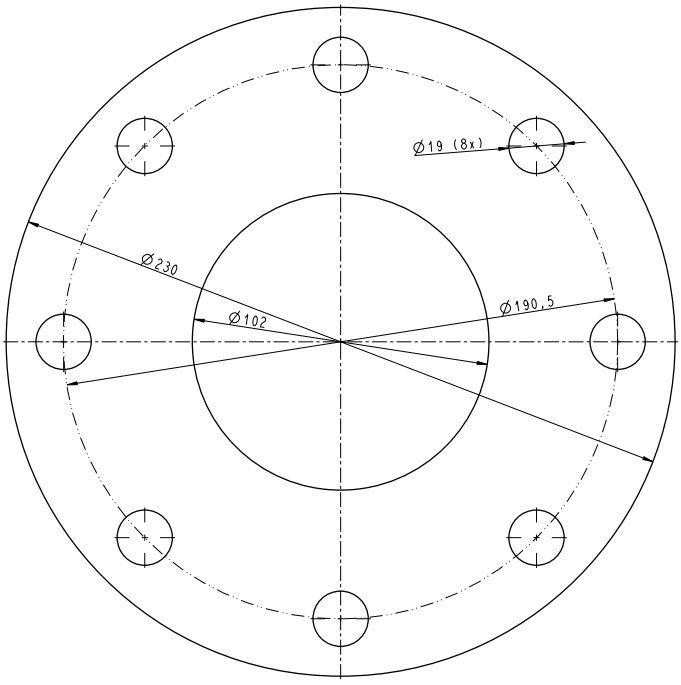

If a customer process flange with an inner diameter of more than 4" (101.6 mm) or an unsuitable gasket is used the flange joint will become prone to leakage.

Pressure ratings

The different pressure ratings for the SITRANS SL flanges depend on the fabrication number stated on the nameplate. All quoted pressure values apply to room temperature.

Fabrication No.	p [MPa]	p [bar]	p [psi]
7MB6221-xxxxx-xBxx	1.6 MPa	16 bar	232.0 psi
7MB6221-xxxxx-xCxx	2.5 MPa	25 bar	362.5 psi
7MB6221-xxxxx-xExx	4.0 MPa	40 bar	580.0 psi

5.2.4 Installation of the sensors

⚠ WARNING

Poisoning personnel and/or damaging equipment

Because of leaks in the environment it could occur that sample gas accumulates in the analyzer. When measuring toxic or corrosive gases, there is a danger of poisoning or damaging parts of the analyzer.

To prevent the danger of poisoning personnel or damage to parts of the analyzer, the analyzer or the system is subject to a leak test following the installation of the sensors.

Device position

The sensors may be mounted in any direction.

When mounting the sensors the large springs of the alignment flanges must face downwards.

Proceed as follows:

1. Check that the flanges are installed properly.
2. Mount the receiver and transmitter, both with gaskets on the flanges and cross-tighten the bolts.

3. Check flanges and sensor for leakage under maximum pressure conditions.

⚠ WARNING

Damage due to leaking process gas

If the leakage checks fail or following equipment fatigue process gas may be discharged.

- Restore safe operating conditions

4. Align the sensors as described in section 'Installing' of the operating instructions or manual.

NOTICE

Damage to the process windows

The process windows can be easily damaged if the following steps are not observed:

- Do not install sensors that require purging before the purging media is accessible.
- Never leave a purged sensor with the purging media switched off.

Note

The stability of the sensor alignment depends on the stability of the construction to which the customer's flange is mounted. If the incinerator wall or smoke duct is subject to movements due to, for instance, thermal changes the sensors will need repeated realignment. This can be avoided by mounting the sensor pair on an external, more stable base, such as a concrete or steel support.

See also

Alignment of SITRANS SL (Page 90)

Technical specifications (Page 203)

5.2.5 Installation of the purging tubes

Note

The purging tubes are unsymmetrical with slanted ends and must be mounted such that the larger side of the tube end points against the direction of the process flow.

The purging tubes ① are mounted by clamping the purging tube flange ⑤ between the customer flange ② and the SITRANS SL process interface ④. The sealing is accomplished by the two process gaskets ③ as shown in the following figure.

When using an ANSI 4"/150 lbs process interface the purging tubes ① have to be clamped between the ANSI 4" adapter flange delivered with the system and the process interface ④.

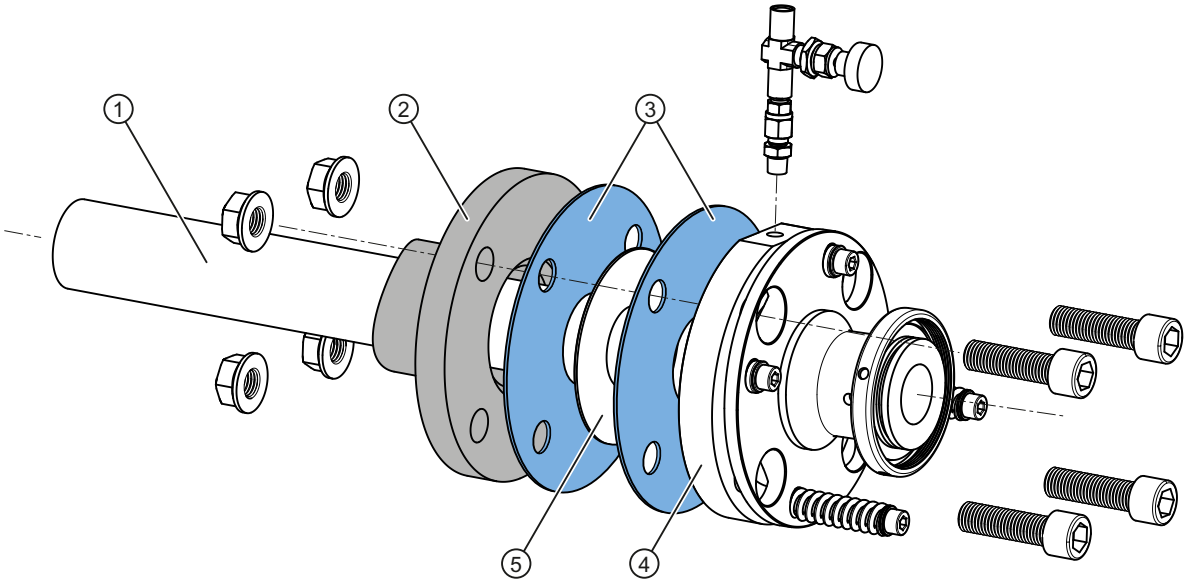

① Purging tube
② Customer flange
③ Process gaskets
④ Process interface
⑤ Purging tube flange

Figure 5-4 Purge tube mounting

5.3 Electric connections non Ex

EMC and NAMUR

The following must be observed regarding EMC and NAMUR:

NOTICE
This is a Class A product. In a domestic environment this product may cause radio interferences in which case the user may be required to take adequate remedial measures

Operating SITRANS SL

Since the device is delivered without cabling the user must provide this. An appropriate cable layout is described in section 3.1.

The cables have to be connected according to the table in section 4.5.3.

The following must be observed when operating SITRANS SL:

WARNING
Never switch on or operate an analyzer with the lid open. The protective earth terminal of the SITRANS SL needs to be connected to the local potential equalization system.

See also

Connecting cables (Page 86)

Cable selection recommendations (Page 62)

5.3.1 System set-up (non Ex only)

Install the cables in the transmitter sensor and receiver sensor according to the following figures.

Non Ex version with sensor connection cable kit

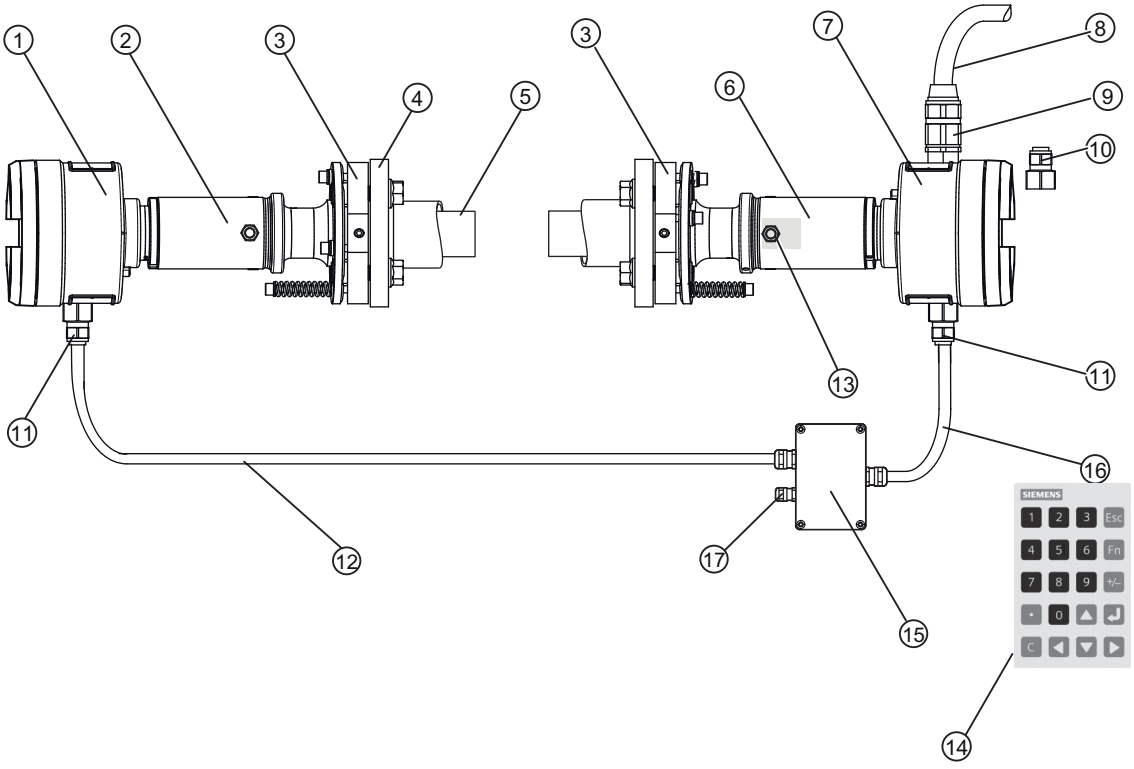

①	Transmitter housing	⑨	Large cable gland (for cables with a diameter of 13 ... 18 mm)
②	Transmitter tube unit	⑩, ⑪	Small cable gland (for cables with a diameter of 8 ... 12 mm)
③	Process interface	⑬	Reference cell inside the receiver unit
④	Customer flange (not included)	⑭	Remote control
⑤	Purging tube (accessory)	Sensor connection cable kit (accessory) consisting of	
⑥	Receiver tube unit	⑫ Sensor connection cable	
⑦	Receiver housing	⑮ Receiver junction box	
⑧	Connection cable (accessory)	⑯ Receiver junction box cable	
		⑰ Cable gland for Ethernet cable	

Figure 5-5 Connection of a non Ex system using a sensor connection cable kit

5.3.2 Screw terminals

Receiver housing

NOTICE
Damage to the equipment Damage to the equipment may result from short-circuit. No conductors of a cable may be left unconnected inside the SITRANS SL receiver or transmitter. Any unused conductor must be connected to the analyzer housing.

Note

No Ethernet connection possible

If Ethernet is connected to a permanently installed cable, the Ethernet jack inside the receiver may not be used. Before using the Ethernet jack inside the receiver, ensure that no cable conductors are connected to the Ethernet screw terminal in the receiver.

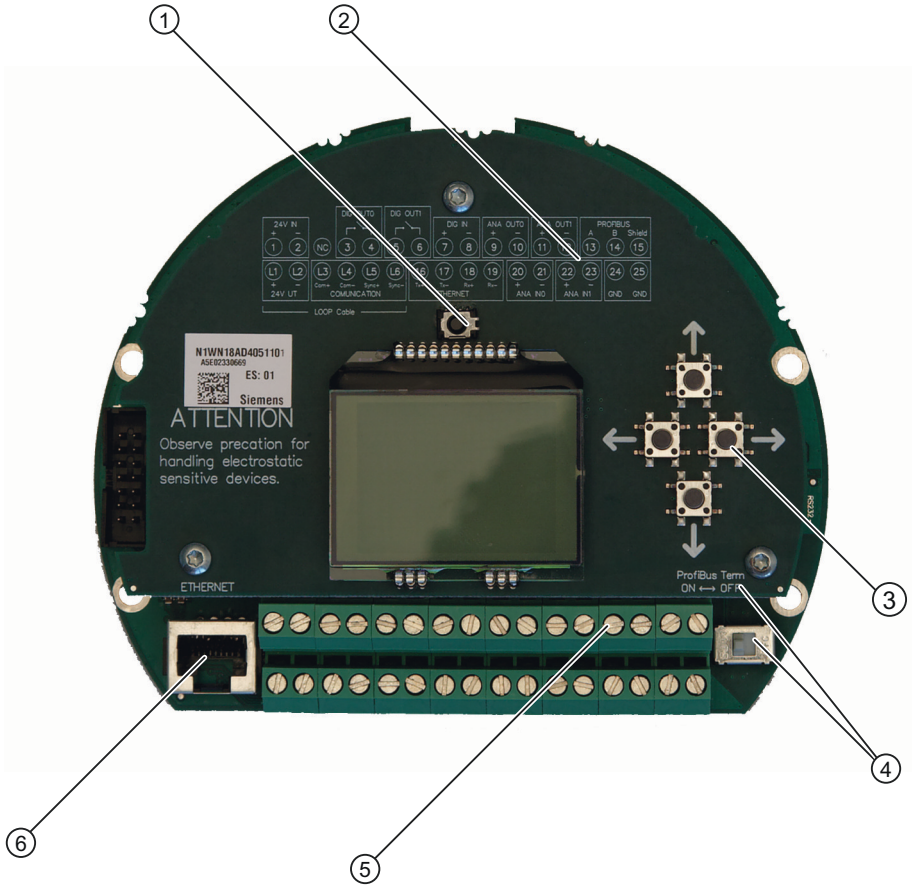

①	Infrared receiver for remote control	④	Switch for termination resistor for PROFIBUS und Modbus
②	Diagram circuit terminals	⑤	Terminals
③	Buttons for LUI navigation	⑥	Ethernet connection

Figure 5-6 Control panel with switch for termination resistor in receiver housing

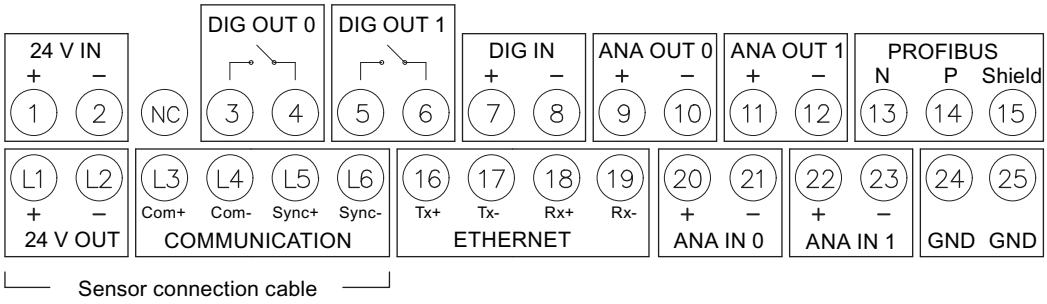

Figure 5-7 Diagram circuit terminals

Transmitter housing

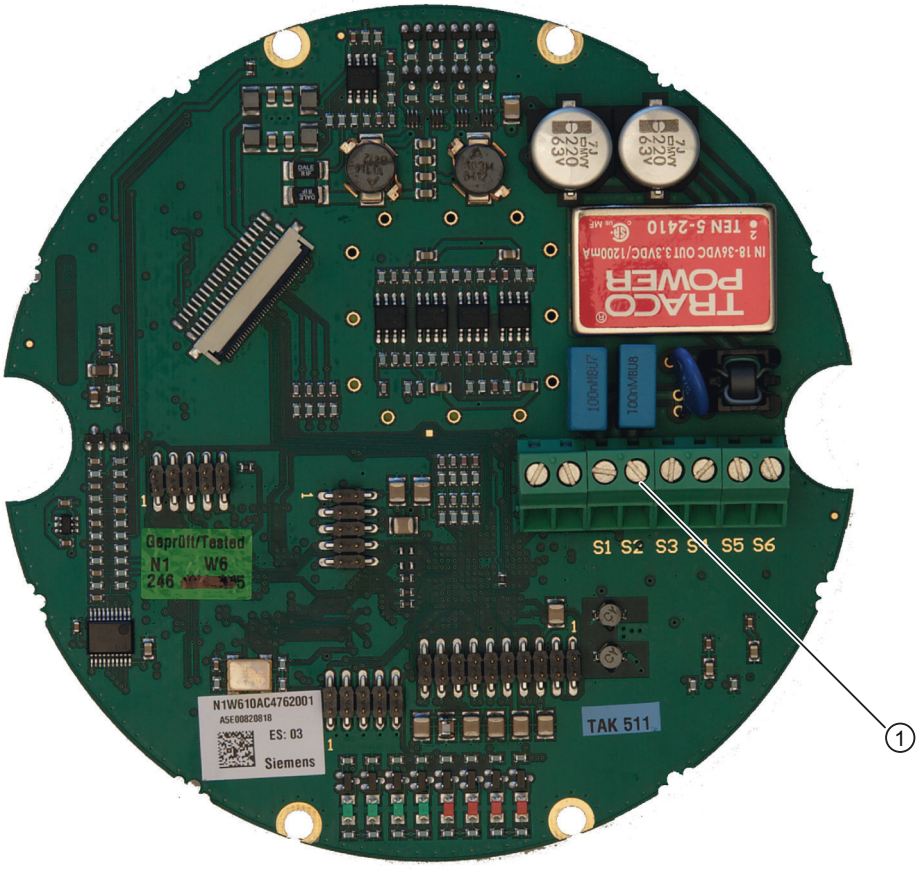

① Terminals

Figure 5-8 Transmitter board with terminals

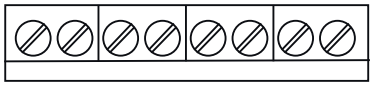

Figure 5-9 Transmitter circuit terminals

Receiver junction box

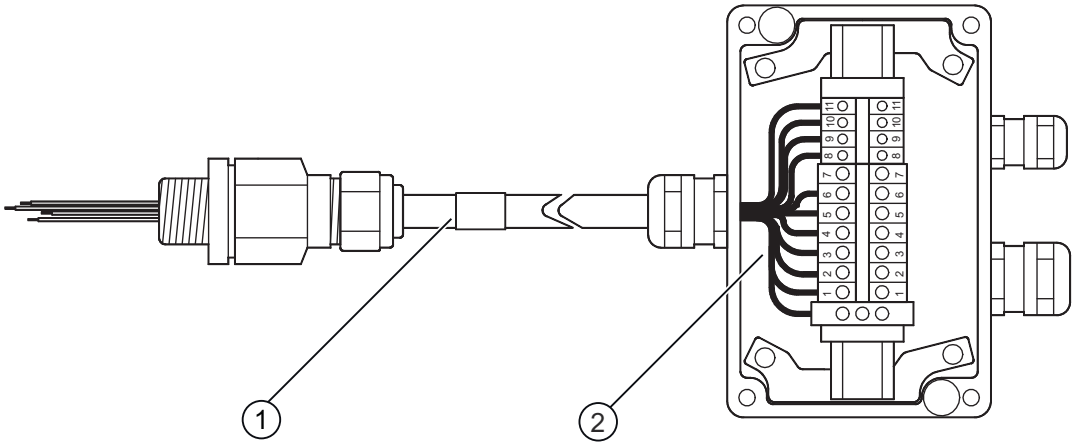

① Receiver junction box cable ② Junction box

Figure 5-10 Receiver junction box cable and junction box

5.3.3 Connecting cables

Sensor connection cable

The sensor connection cable connects the receiver and the transmitter of the SITRANS SL. The sensor connection cable is used to transfer:

- 100 kbps RS-485 communication and synchronization
- power for the transmitter
- ground.

Table 5-1 Electric connections for sensor connection cable, valid for non Ex product versions

Screw terminals on junction board			Function / Power
Receiver	**Transmitter**		
L1	S1	+	24 V DC power supply to transmitter unit
L2	S2	-	
L3	S3	Com+	RS485 communication
L4	S4	Com-	
L5	S5	Sync+	
L6	S6	Sync-	
Chassis	Chassis		Ground
Chassis	Chassis		Ground

Receiver junction box Ex-e

Note

The junction box of the receiver unit is the same for both IECEx applications and sensor connection cable kit for non Ex applications.

Table 5-2 Electric connections for receiver junction box cable of sensor connection cable kit (accessory)

Conductor color	Connector position in junction box	Remarks	
Red	1	+	24 V DC power supply for transmitter unit
Blue	2	-	
Pink	3	Com +	RS485 communication
Grey	4	Com -	
White	5	Sync+	
Brown	6	Sync -	
-	7	NC	

Conductor color	Connector position in junction box	Remarks	
Grey-Pink	8	Tx +	Ethernet connection
Red-Blue	9	Tx -	
Black	10	Rx +	
Violet	11	Rx -	
Green	PE terminal		
Yellow	PE terminal		
Shield	Gland		

The electric connections for the receiver junction box cable of sensor connection cable kit (accessory)' have changed to read as shown in the following table. This change applies to receiver cables as delivered from June 2018 on to be identified by a cable gland with red cap.

Table 5-3 Electric connections for receiver junction box cable of sensor connection cable kit (accessory)

Conductor color	Connector position in junction box	Remarks	
Red	1	+	24 V DC power supply for transmitter unit
Blue	2	-	
Pink	3	Com +	RS485 communication
Grey	4	Com -	
White	5	Sync+	
Brown	6	Sync -	
-	7	NC	
Green	8	Tx +	Ethernet connection
Yellow	9	Tx -	
Black	10	Rx +	
Violet	11	Rx -	
-	PE terminal		
-	PE terminal		
Shield	Gland		

Connection cable

Table 5-4 Electric connections for analog I/O and Modbus connection cable, valid for non Ex product versions

Terminals in receiver junction board		Function/Power	Ethernet cable
1	+	Supply voltage 19 ... 30.2 V DC, ≤10 VA [1]	
2	-		
3	Closed when energized [4]	Digital OUT 0 (relay) 30 V, 0.5 A [3]	
4			
5	Closed when energized [4]	Digital OUT 1 (relay) 30 V, 0.5 A [3]	
6			

Terminals in receiver junction board		Function/Power	Ethernet cable
7	+	Digital IN 0 0 ... 30 V DC [2]	
8	-		
9	+	Analog OUT 0 (Measurement) 30 V DC, 24 mA [3]	
10	-		
11	+	Analog OUT 1 (Measurement) 30 V DC, 24 mA [3]	
12	-		
13	Modbus D1 (RxD/TxD_N - data inverted))	RS-485 Modbus - 7 ...+ 12 V DC	
14	Modbus D0 (RxD/TxD_P - data not inverted)		
15	Modbus Shield		
16	Tx+	Ethernet [5]	White/Orange
17	Tx-		Orange
18	Rx+		White/Green
19	Rx-		Green
20	+	Analog IN 0 (Temperature) 0 .. 30mA, 120 Ω [2]	
21	-		
22	+	Analog IN 1 (Pressure) 0 ... 30 mA, 120 Ω [2]	
23	-		
24		Ground	
25		Ground	
Chassis		Ground	
Chassis		Ground	Shield

1) Maximum possible power consumption.

2) Maximum input values.

3) Maximum output values. The following figures show how the outputs are used.

4) Supported relay modes: "Normally Energized" (default), "Normally De-Energized". For configuration, see Setup (Page 134).

5) We recommend not to connect the connection cable directly to Ethernet connectors. Instead the sensor connection cable kit should be used for this purpose.

Table 5-5 Electric connection for PROFIBUS connection cable (accessory)

Conductor color/no.	Connector position (Receiver junction board)	Remarks	Function
1 (black)	1	+	Supply voltage 19 ... 30.2 VDC, ≤10 VA
2 (black)	Chassis		
Red	13	A line	RS 485 communication
Green	14	B line	
3 (black)	2	-	Supply voltage 19 ... 30.2 VDC, ≤10 VA

Conductor color/no.	Connector position (Receiver junction board)	Remarks	Function
4 (black)	Chassis		
Shield wire	15	PROFIBUS DP shield	

Details to PROFIBUS connection and operation can be obtained from PROFIBUS DP interface (Page 147)

Example: Digital out 0

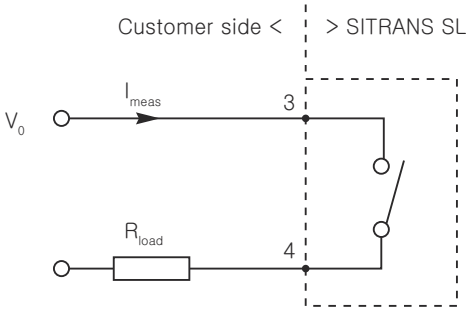

Figure 5-11 Using digital output

- V_0 can be maximum 30 V DC.
- R_{load} must be minimum 60 Ω (max. 0.5 A in the relay).

Example: Analog out 0

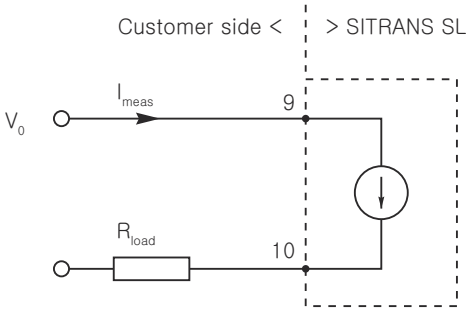

Figure 5-12 Using analog output

- V_0 must be minimum 7.5 V and maximum 30 V DC.
- R_{load} can be maximum ((V_0 – 7.5 V)/0.025 A) Ω.

Note

SITRANS SL provides no supply voltage for the analog outputs, i.e. the analog outputs of the SITRANS SL are passive and thus must be powered externally!

5.4 Alignment of SITRANS SL

Both sensors of the SITRANS SL have to be aligned such that the laser beam from the transmitter hits the photo detector in the receiver. To facilitate this both transmitter and receiver have a spherical surface incorporated in the flanges. The alignment is done by adjusting the position of the flanges on this surface by means of two adjustment screws and thus pointing the axis of symmetry - see following figure.

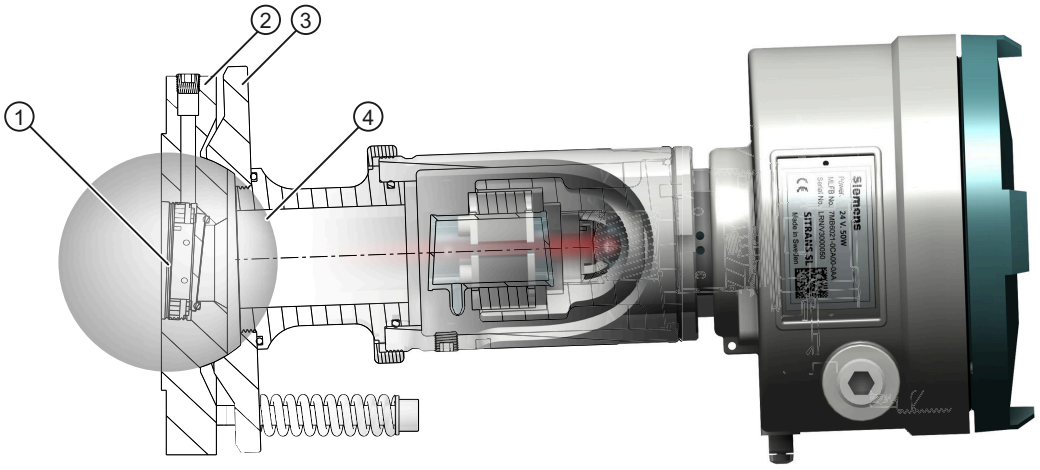

① Center of alignment
② Flange with convex spherical surface
③ Flange with concave spherical surface
④ Spherical surface

Figure 5-13 Alignment sphere

WARNING

Danger of explosion

The SITRANS SL alignment kit is not suitable for use in hazardous areas. Therefore it must never be used in a hazardous area except with an approval of the plant manager (hot work permit)!

5.4.1 Alignment kit

Note

The alignment kit is not part of the delivery. If you commission the analyzer yourself, you need to order the alignment kit additionally.

The alignment kit is necessary to align SITRANS SL. It consists of:

- a light source
- an alignment tool consisting of
  - aiming tool base
  - fine aligning unit
- a coarse alignment unit
- a lens hood
- an Allen key for the alignment of the sensors
- two wrenches to secure/release the clamp ring:
  - one for the clamp ring,
  - one to prevent the adapter on the process interface to get loose when the clamp ring is secured
- a tube of lubricant for the threads to prevent them from getting stuck.

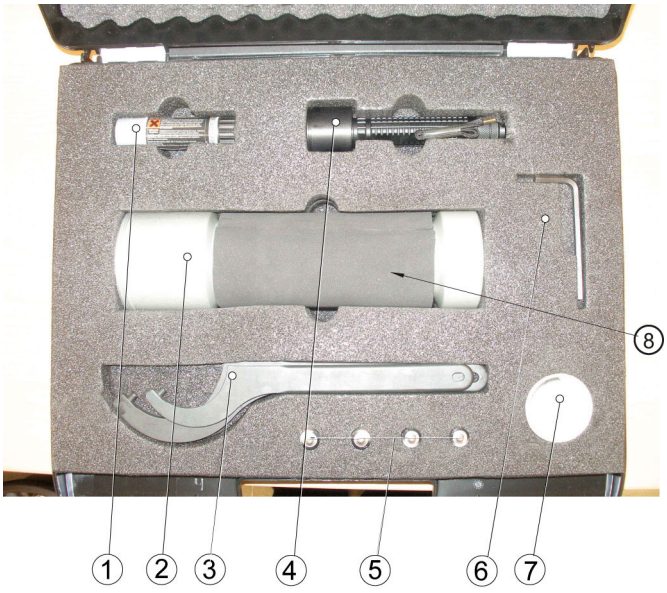

① Thread lubricant
② Alignment tool
③ Hook wrenches
④ Light source
⑤ 4 Batteries LR 6 1.5 V
⑥ Allen key
⑦ Coarse alignment unit
⑧ Lens hood

Figure 5-14 Alignment kit

5.4.2 Alignment procedure

⚠ CAUTION

Alignment procedure

Correct alignment is crucial for proper operation of the analyzer. The alignment procedure has to be carried out with utmost care.

1. Before mounting the alignment kit, make sure that the contact surface between flange and the alignment kit is clean.
2. During the adjustment procedure make sure that you have obtained the smallest possible focal spot and that it is positioned at the very center of the crosshair.
3. Before remounting the sensors make sure that the contact surfaces between sensors and flanges are clean.

The aim of the alignment procedure is to provide a collinear optical axis of both receiver unit and transmitter unit. To do so first align the receiver to the transmitter and then align the transmitter to the receiver.

To align a sensor, a point light source is mounted to the flange on the opposite side of the sensor to be aligned, and the alignment optics is mounted to the flange of the sensor. This flange is aligned by centering the projected image of the point source to the center of the cross hair of the alignment tool.

The complete procedure for the alignment is described as follows starting with the receiver side.

Note

It is also possible to start with the transmitter side but it is always necessary to align both sides.

1. Release the clamp ring on the RTU (receiver tube unit) using the wrenches.

   Support the receiver when releasing.

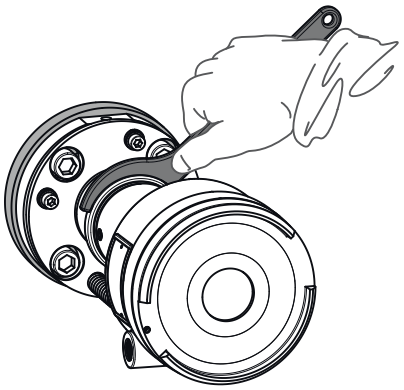

2. Remove the receiver unit

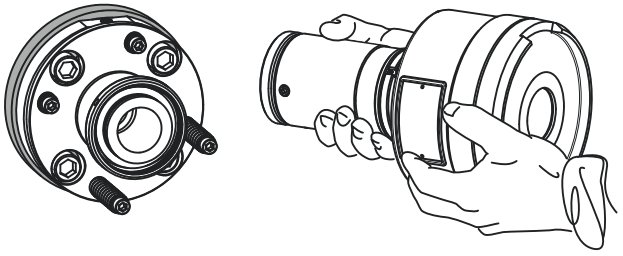

3. Attach the light source and switch it on

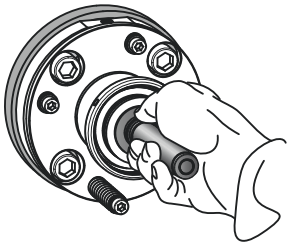

   Now go to the transmitter side!

4. Release the clamp ring on the TTU (transmitter tube unit) using the wrenches.

   Support the transmitter when releasing.

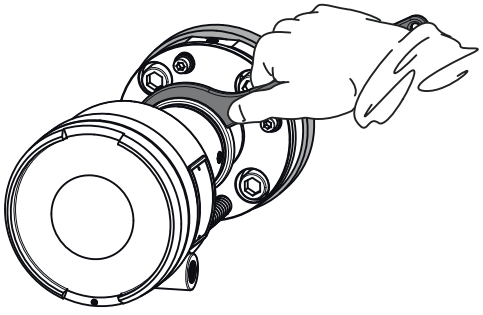

5. Remove the TTU.

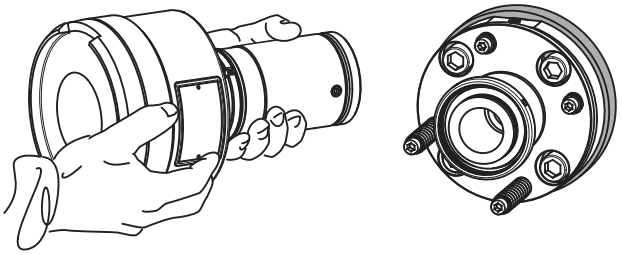

6. Remove the fine aligning unit from the aiming tool base by loosening the securing screw without taking it off. Carefully slide the fine aligning unit out. Attach the aiming tool base. Orient the screw of the aiming tool towards the purging inlet such that they form one line (arrows in adjacent figure).

   The screws of the alignment tool shall only be moved by hands. Never use wrenches!

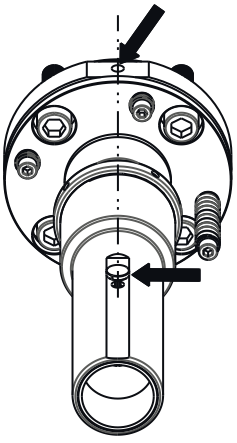

7. Start with the coarse aligning unit. Slide it into the aiming tool base.

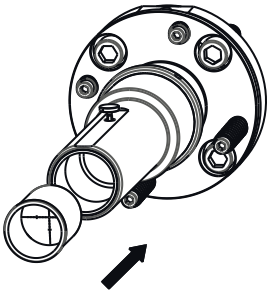

8. Now you will see a light spot from the light source, provided it is turned on.
   Focus by moving the outer part as indicated in the adjacent figure until you get the smallest and sharpest possible spot. The size of the square spot depends on the distance between the receiver and the transmitter; the longer the path the smaller the spot.
   Use the lens hood to suppress ambient light for a better visibility of the focused light.

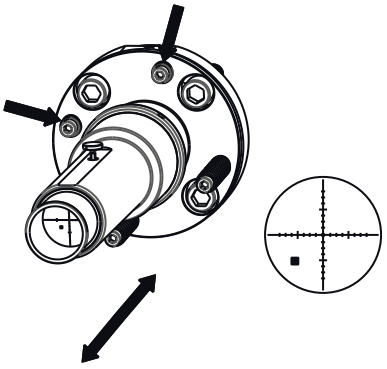

9. Align the transmitter using the supplied Allen key by turning the two screws without springs until the focused spot appears in the center of the crosshair.
Do not turn the screws with the springs!

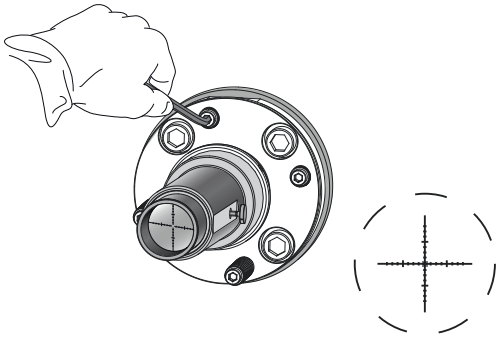

10. Remove the coarse aligning unit and replace it with the fine aligning unit.
Verify if the target of the fine alignment unit is orientated such that the arrow on the screen is pointing to the purging inlet of the flange.

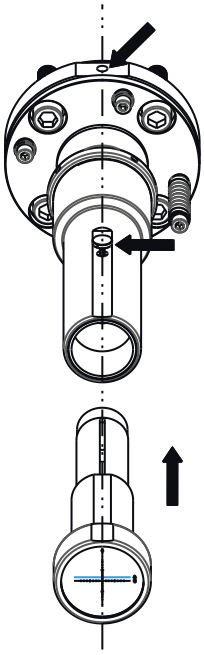

11. Now you will see a bigger light spot from the light source. Focus by moving the outer part as indicated in the adjacent figure until you get the sharpest possible spot.

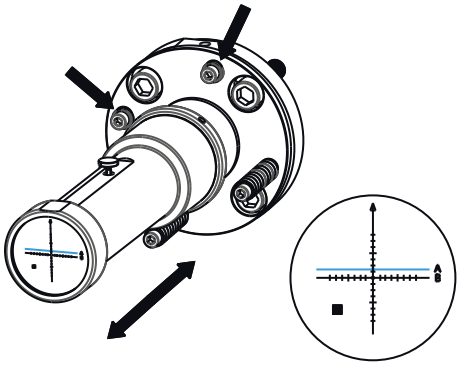

12. Align the transmitter using the supplied Allen key until the focused spot appears in the center of the crosshair corresponding to your SITRANS SL variant in the following table:

MLFB no.	Target
7MB6221-?AB..	B
7MB6221-?AC..	B
7MB6221-?AD..	B
7MB6221-?JC..	A

13. Change places of the aiming tool and the light source and repeat the procedure with the receiver starting at step 7.

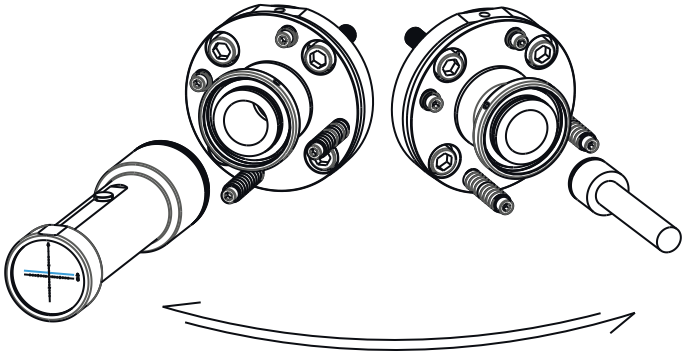

If this is done correctly the sensor pair is now aligned and should stay so even when the sensor bodies are removed and put back again. The system is designed to stay aligned even if a new receiver/transmitter unit is installed as replacement of an existing one.

5.4.3 Process interface without springs for long path application

To ensure an alignment stability the process interfaces of the SITRANS SL -R03 option (long path O_2 high temperature application) are modified as follows:

- Spring screws are replaced by standard screws and washers.

5.4.3.1 Alignment kit

To enable the alignment of the process interfaces for the -R03 option a different light source is provided. This light source has a removable cap which allows two different aperture diameters in front of the lamp. In case of a long path length, the cap head should be removed to provide a larger aperture which ensures that sufficient light reaches the opposite side of the process. The light source focus is also adjustable by sliding the head of the lamp. In case of a non-visible spot on the target tool slide it forward. If the spot is not bright enough slide the head backward to focalize the light.

The lamp enables different light power modes:

- 1 click = high power mode (for long path)
- 2 quick clicks = low power mode (to save battery power and align at a low path without blurring)
- 3 quick clicks = blinking mode (might help to clearly identify the right light source)



Figure 5-15 light source

5.4.3.2 Alignment procedure

This section describes the alignment of the process interface of the SITRANS SL -R03 option (long path O_2 high temperature application).

CAUTION

Alignment procedure

Correct alignment is crucial for proper operation of the analyzer. The alignment procedure has to be carried out with utmost care.

1. Before mounting the alignment kit, make sure that the contact surface between flange and the alignment kit is clean.
2. During the adjustment procedure make sure that you have obtained the smallest possible focal spot and that it is positioned at the very center of the crosshair.
3. Before remounting the sensors make sure that the contact surfaces between sensors and flanges are clean.

The alignment of the process interfaces for -R03 options consists of the following alignment steps.

1. Alignment of the process interfaces with an alignment kit.
2. Fine alignment reading transmission value.

Step 1 - Alignment of the process interfaces with an alignment kit

To align a sensor, a point light source is mounted to the flange on the opposite side of the sensor to be aligned, and the alignment optics is mounted to the flange of the sensor. This flange is aligned by centering the projected image of the point source to the center of the crosshair of the alignment tool. Before you start the alignment procedure shut down the device.

The complete procedure for the alignment is described as follows starting with the receiver side.

CAUTION
Damage of flanges or threads To avoid any material damage • close the purging valves on both sides (receiver and transmitter) before you start working.

1. Release the clamp ring on the RTU (receiver tube unit) using the wrenches.

   Support the receiver when releasing.

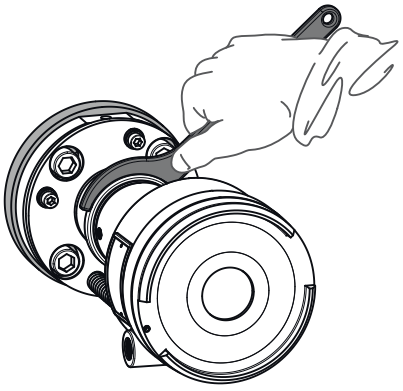

2. Remove the receiver unit

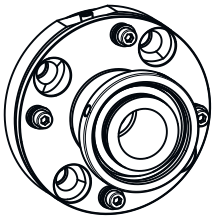

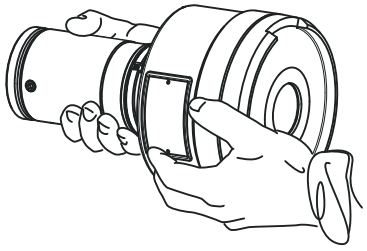

3. Attach the light source and switch it on

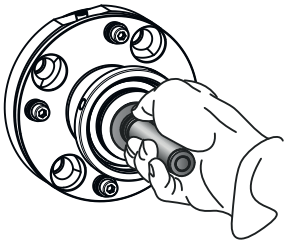

   Now go to the transmitter side!
   Before you continue make sure the purging valve is closed!

4. Release the clamp ring on the TTU (transmitter tube unit) using the wrenches.

   Support the transmitter when releasing.

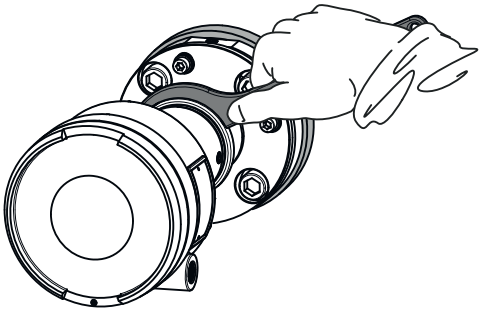

5. Remove the TTU.

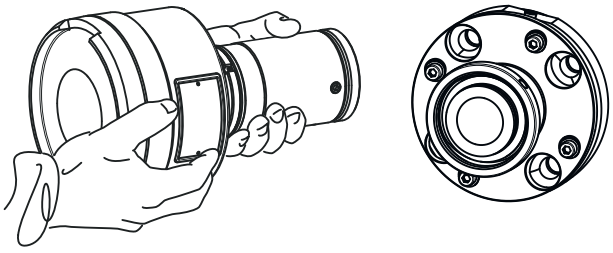

6. Remove the fine aligning unit from the aiming tool base by loosening the securing screw without taking it off. Carefully slide the fine aligning unit out. Attach the aiming tool base. Orient the screw of the aiming tool towards the purging inlet such that they form one line (arrows in adjacent figure).

   The screws of the alignment tool shall only be moved by hands. Never use wrenches!

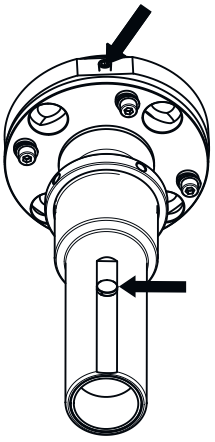

7. Start with the coarse aligning unit. Slide it into the aiming tool base.

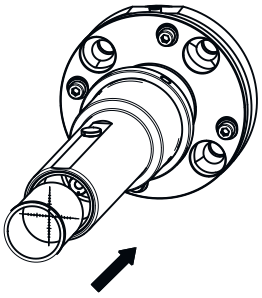

8. Now you will see a light spot from the light source.
Focus by moving the outer part as indicated in the adjacent figure until you get the smallest and sharpest possible spot. The size of the square spot depends on the distance between the receiver and the transmitter; the longer the path the smaller the spot.
Use the lens hood to suppress ambient light for a better visibility of the focused light.

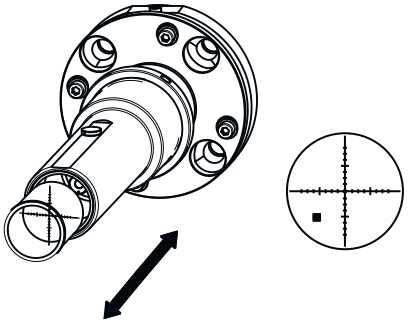

9. Align the transmitter using the supplied Allen key as follows:
   1. Start with the axis x direction – untighten screw 1 and progressively tighten opposite screw 2 step by step until the focused spot appears on the y axis of the crosshair. Then tighten screw 1.
   2. Continue with axis y direction - untighten screw 3 and progressively tighten opposite screw 4 step by step until the focused spot appears in the center of the crosshair. Then tighten screw 3.

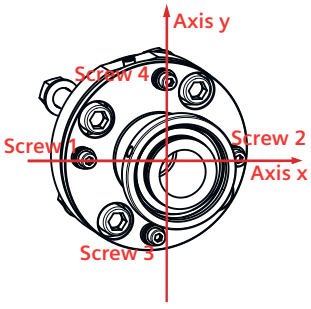

10. Change places of the aiming tool and the light source and repeat the procedure with the receiver starting at step 7.

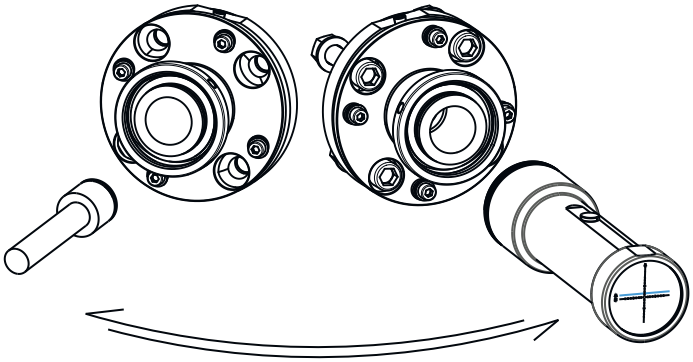

If this is done correctly the sensor pair is now aligned. Continue with step 2 - fine alignment.

Step 2 - Fine alignment reading transmission value

After a first alignment of the process interfaces using the alignment kit, the alignment of the transmitter side should be completed by monitoring the device transmission value.

To do so mount the sensors onto the process interfaces and then switch on the device. Transmission value can be checked using the LUI screen on the receiver side (select the respective transmission menu using the up/down arrows) and/or using the corresponding analog output.

The fine alignment procedure is then as follows:

1. Modify alignment in axis x direction with screws 1 and 2.
   First untighten screw 1 and then progressively tighten screw 2 proceeding step by step (only few degrees of rotation at each steps).
   Continue to do so until you find the beam edge (no more transmission).
2. Tighten screw 1 to lock the movement.
3. Mark the corresponding screw adjustments on process interface and screw heads.
4. Then go the opposite direction.
   There untighten screw 2 and progressively tighten screw 1 proceeding step by step (only few degrees of rotation at each steps).
   Continue to do so until you find the beam edge (no more transmission).
5. Tighten screw 2 to lock the movement.
6. Mark the corresponding screw adjustments on the process interface.
   Thus, the beam diameter along x axis is now determined and corresponding adjustments of screws well known.
7. Tighten screws 1 and 2 to central adjustment using the marks performed at steps 3 and 6.
8. Repeat the same procedure (steps 1 through 7) on y axis (screws 3 and 4).
9. Perform iterative actions by repeating steps 1 through 8 several times until you reach a stable result of the transmission value.

Having finished this procedure the sensor pair is aligned.

5.5 Purging

The easiest way to avoid condensation and dust deposits on the sensor windows or excessively high thermal load of the windows and the sealing material as well as the sensor electronics is to purge them, e.g. with air. Purging must be selected depending on the application. The sensors can therefore be configured for the respective situation.

There are two different types

- Purging of optical process interfaces
- Purging of sensors.

Note

Not all purging options are available to all applications. Please refer to the specification of each application for details.

5.5.1 Sensor side purging

For some applications (e. g. oxygen) purging of the sensors is necessary. In this case a needle valve and an exit aperture must be mounted on the sensors. The exit aperture is used to build up a slight overpressure inside the sensor to enable the purging gas to penetrate all relevant areas within a short time during all measurements.

The purging gas must not contain any concentrations of the measurement component. The presence of the gas in the sensor heads or the purging tubes may influence the measured concentration. In oxygen measurements it is necessary to purge the sensor with an oxygen free gas, such as nitrogen.

When measuring CO also purging of the sensor may be considered. Normally the CO content in standard air is lower than the detection limit of SITRANS SL. Nevertheless, the CO content may be higher inside buildings and industrial plants due to exhalation or combustion processes. In this case sensor purging is necessary.

⚠ WARNING

Damage to operating staff

Whenever the sensor heads are to be opened or disconnected from the process interface or the gas tubing make sure that any overpressure in the sensor heads is removed prior to any work. Opening sensor heads under overpressure may result in dangerous injuries to the operator.

NOTICE

Uncontrolled discharge of process gas

When the sensor purging is connected to the process purging, it may be necessary to use non-return valves to ensure no process gas can enter the purging gas line in the event of failure of the purging gas supply. This applies especially in the case of cascaded process and sensor purging where there is otherwise the danger that, for example, corrosive process gases could enter the sensor enclosure.

Note

When continuous purging is needed, make sure that the needle valve set to its open position. Start the purging process with the highest permitted pressure at the purge inlet. This decreases the necessary time to purge the sensor heads completely free of ambient air. When the sensor heads are free from ambient air the purge flow can be reduced to values significantly below 1 l/min. As long as a small overpressure in the sensor heads remains ambient air will not enter.

Purging with nitrogen on the sensor side is almost always necessary for O_2 applications to avoid an offset caused by the oxygen of the air present in the unit. The volumes in the sensor head are then continuously purged with nitrogen.

Be aware that it is necessary to purge the sensors free of any ambient air every time after sensor purging was disabled.

5.5.2 Process side purging

With this option a needle valve is supplied with the analyzer which must be mounted on the process interface.

⚠ WARNING

Damage due to overpressure

Observe that the use of this needle valve opens up into the process. The process must be permanently monitored if it is under pressure. If any danger for personnel or equipment can arise from the over pressurized process we recommend to mount a check valve on the process interface to prevent flow out from the process.

Make sure that under no circumstances the process gas will intrude into the purging system. This applies particularly to a cascaded optics housing and process purging which otherwise may lead to ingress of corrosive process gases.

NOTICE

Damage to the optics

Always install the purging system before you install the optics housings to avoid damage to the optics during the rest of the installation process. For optimal results use optics housings equipped for the specific purging type, supplied by Siemens AG.

⚠ WARNING

Ex zone entrainment

It is in the responsibility of the customer to implement a safety concept that ensures that Ex zone entrainment cannot occur when using process purging. A possible solution may be the use of non-return valves in the process purging gas flow to ensure that no gas can leave the process through the purging gas connection.

5.5.3 Purging set-up

Mount the purging connectors according to the following procedure (see the following figure):

1. Remove the plugs from the RTU/TTU and the process flange.
2. Mount the needle valves and the exit aperture.
3. Attach a piece of 6 mm tubing to the needle valves and route it to an appropriate purging gas source.

⚠ CAUTION

Make sure that the purge gas quality is sufficient to avoid rapid degradation of the visibility in the optical path.

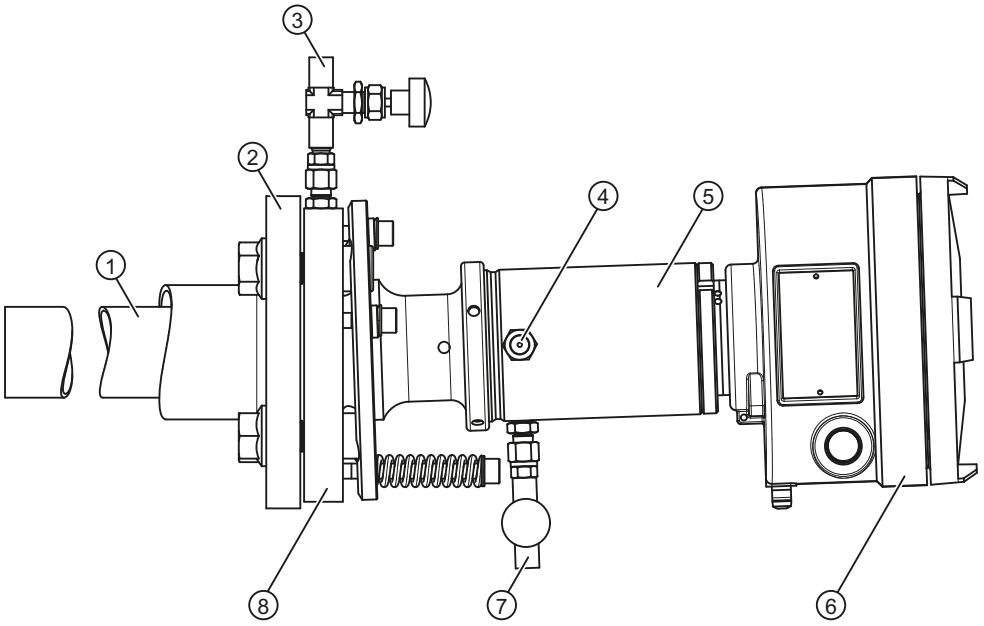

①	Purging tube	⑤	RTU or TTU (Receiver or transmitter tube unit)
②	Process flange	⑥	RHU or THU (Receiver or transmitter house unit))
③	Process purging input	⑦	Needle valves
④	Sensor purging output	⑧	PI (Process interface)

Figure 5-16 Sensor purging input with needle valve

Note

When using a plastic tube for connecting the purge gas supply, be sure to use the supplied rigid metal insert.

Commissioning

6

6.1 General information for commissioning

Device position

The SITRANS SL may be mounted in any direction.

When mounting the sensors the large springs of the alignment flanges must face downwards. All purging outlets must face downwards.

Operation

⚠ WARNING
Dangerous voltage Certain parts in the analyzer carry dangerous voltages which can become accessible as a result of an open cover. • Before you commission the device make sure that it is properly closed. • Never open the device during operation

Before connecting and switching on the device, the operator must be familiar with the device operation.

The user must also be familiar with the connection and operation of:

- Analog and digital pressure and temperature sensors, e.g SITRANS P or SITRANS T
- PROFIBUS DP and SIMATIC Manager when using the PROFIBUS-enabled SITRANS SL analyzer;
- Modbus protocol and Modbus system configuration when using the Modbus-enabled SITRANS SL analyzer

Temperature influence

During operation, make sure that the permissible ambient temperature of -20 °C to 55 °C (-4 °F to 131 °F) is observed.

6.2 Starting SITRANS SL for the first time

6.2.1 Defining the path length

It is recommended that the open ends of the purging tubes represent the reference points from which the path length is determined. When the flanges are permanently installed, measure the distance between the outside of the flanges with an accuracy of at least ±10 mm (±0.4"). This distance is used to calculate the path length by subtracting the length of the flange tubes and will later be used in the analyzer for the calculation of the gas concentration. In the area where the purging gas and the measurement gas are mixed there will be a zone of uncertainty. This zone will depend on the purging flow and the flow of the measurement gas.

The path length is entered into SITRANS SL, preferably using the remote control. The path length is the distance (l) according to the following figure. For measuring the path length (l) refer also to Installation of process flanges (Page 75).

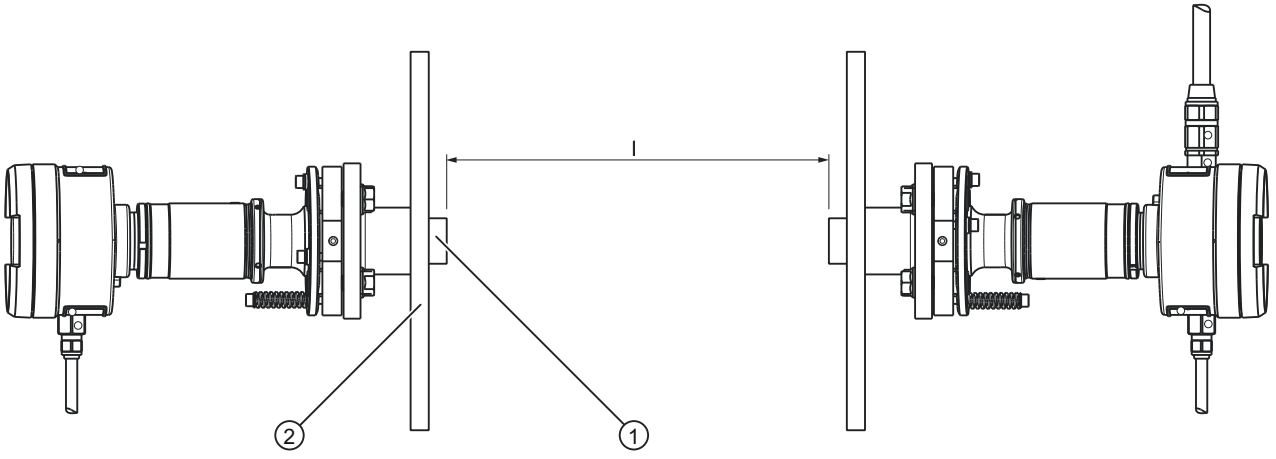

① Purging tube
② Process wall
l Path length

Figure 6-1 Defining the path length

6.2.2 Further input parameters

Input of process temperature

The process temperature can either be input using an external sensor or entered as a fixed value using the remote control, see also Electric connections non Ex (Page 80) and Operation (Page 127) .

Input of process pressure

The process pressure can either be input using an external sensor or entered as a fixed value using the remote control, see also Electric connections non Ex (Page 80) and Operation (Page 127).

6.3 PROFIBUS configuration for SITRANS SL

Information on the input and output range as well as the consistency of cyclically transmitted data is defined in the device master data file (GSD file). Using the configuration package, this information is checked by the device and declared valid. During projection phase the data to be transmitted in cyclical operation will be determined. This enables an optimal quantity of the data to be transmitted. In the Siemens control system, the GSD files of all commonly used devices are already available. These GSD files are also available on the Internet for a subsequent import.

6.3.1 Cyclic data transfer

Cyclic data transmission is used to transfer data necessary for process automation between the control or automation system (class 1 master) and the SITRANS SL device.

Setting the PROFIBUS address

The PROFIBUS address is factory-set to 126. It can be changed by the user

- using LUI (see section Menu - Communication (Page 143))
  or
- using the configuration tool LDSComm.

6.3.2 System integration

The user data which are provided over the PROFIBUS line to the process control system are based on the target configuration.

The following example is taken from a Siemens STEP7 project. It demonstrates how to configure the cyclic DPV0 data exchange.

Overview of installation and configuration steps

1. SIMATIC MPI cable installation
2. PG/PC Interface setting
3. Loading GSD file
4. Network configuration with the SIMATIC Manager

5. Creation of a new project with the SIMATIC Manager
6. Hardware configuration

6.3.3 SIMATIC MPI cable installation

- SIMATIC Manager uses SIMATIC MPI cable for loading configuration data to the PLC via its SIMATIC MPI connector.
- SIMATIC MPI cable consists of a PCMCIA card and a serial cable for connecting to the MPI port of the PLC.
- SIMATIC MPI cable is ready to use after its driver has been installed successfully.

6.3.4 PG/PC interface setting

The SIMATIC MPI cable setting has to be made using the "Set PG/PC Interface" window from the Options menu.

Prerequisite:

The connection between the PC and SITRANS SL has been established. The SIMATIC Manager is installed on the PC and the Windows XP operating system has been started.

Procedure:

Start the operating program "Set PG/PC Interface" (start bar **Start ➔ Programs ➔ SIMATIC ➔ Options ➔ Set PC-PG Interface**).

1. Select one of the following options in the list "Interface Parameter Assignment Used":
   - CP5512 (MPI) must be chosen for the connection to the MPI port of the PLC
   - CP5512 (PROFIBUS) must be chosen for the connection to the PROFIBUS connector of the PLC
   - CP5613 2A
   - CP5611 PCMCIA

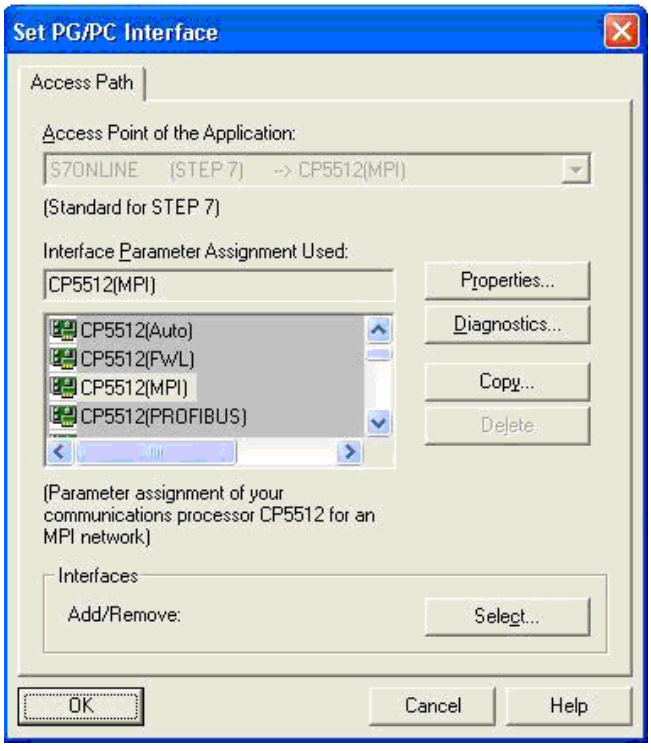

2. The interface properties such as transmission rate can be selected from properties window.

6.3.5 Loading GSD file

You use the SIMATIC Manager to load the GSD file of SITRANS SL.

Procedure:

Start the operating program "SIMATIC Manager" (start bar **Start ➔ Programs ➔ SIMATIC ➔ SIMATIC Manager**).

1. Select the "Open" command in the menu "File".
2. Select the project of SITRANS SL.

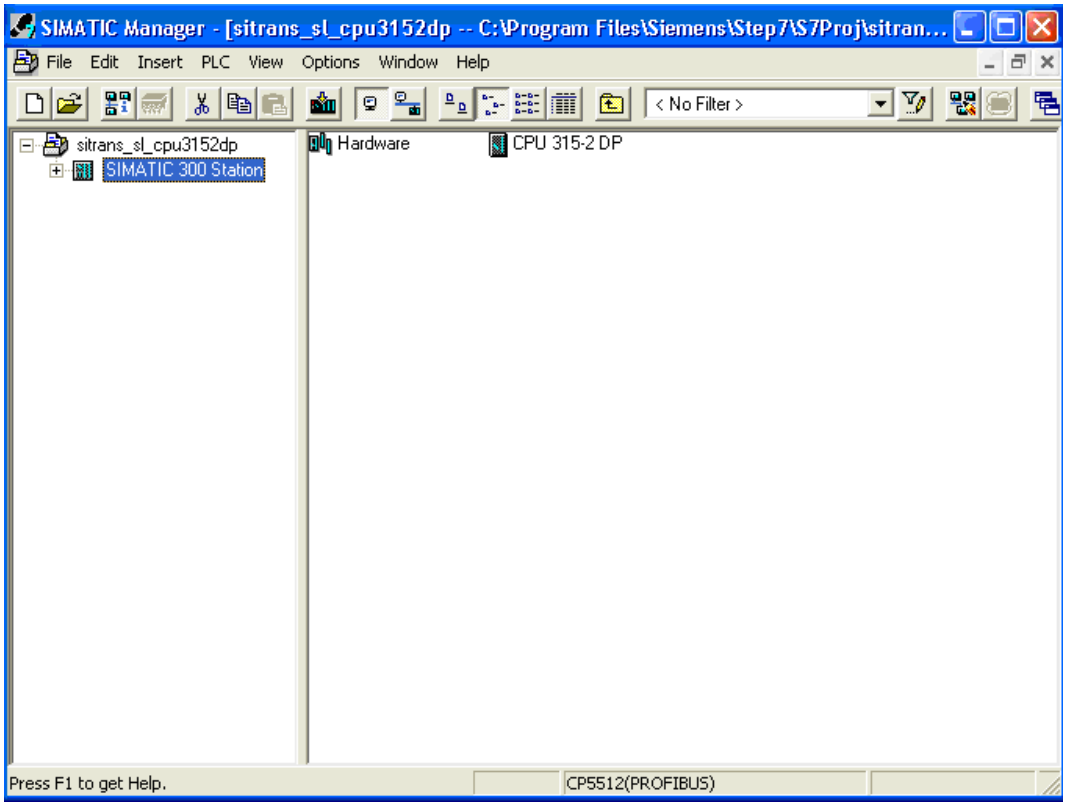

1. Double click on "Hardware" for opening "HW Config".
2. Select the "Install GSD file..." in the menu "Options".

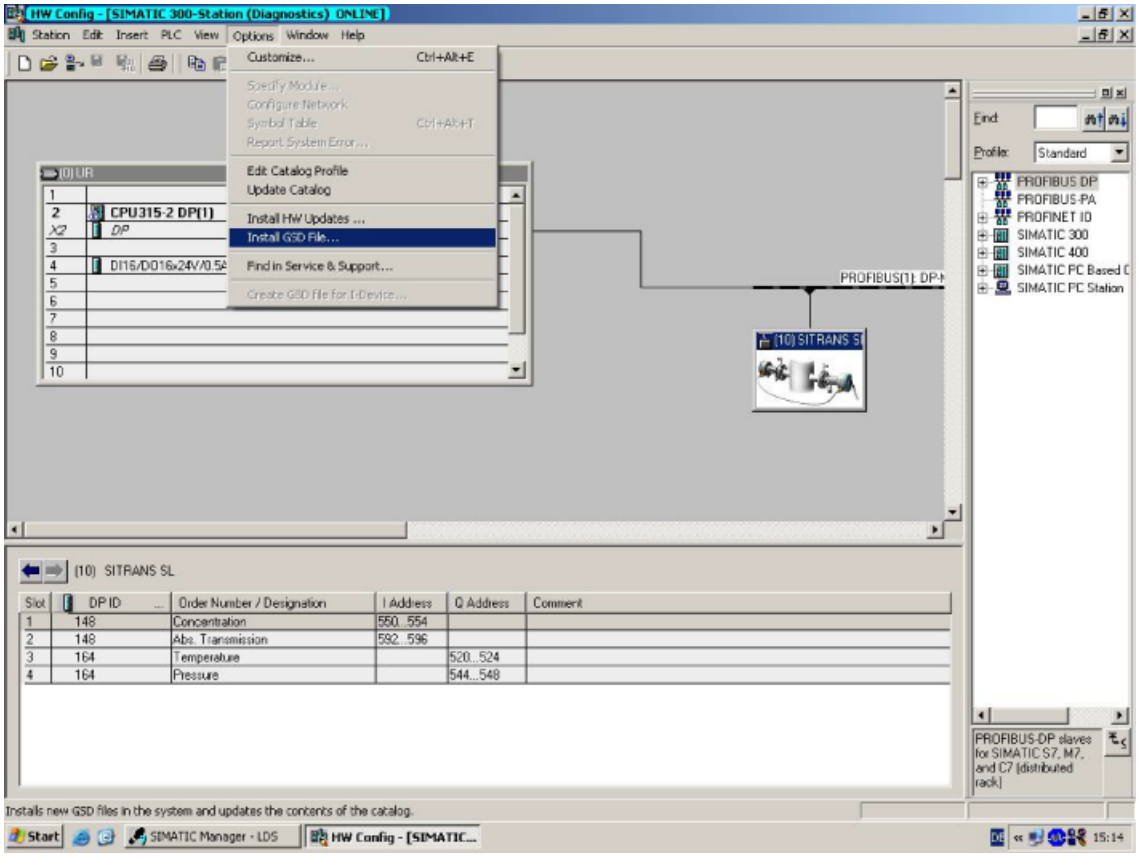

1. Close the opened project in HW Config.
2. Navigate to the corresponding GSD file using the button "Browse" on your hard drive.

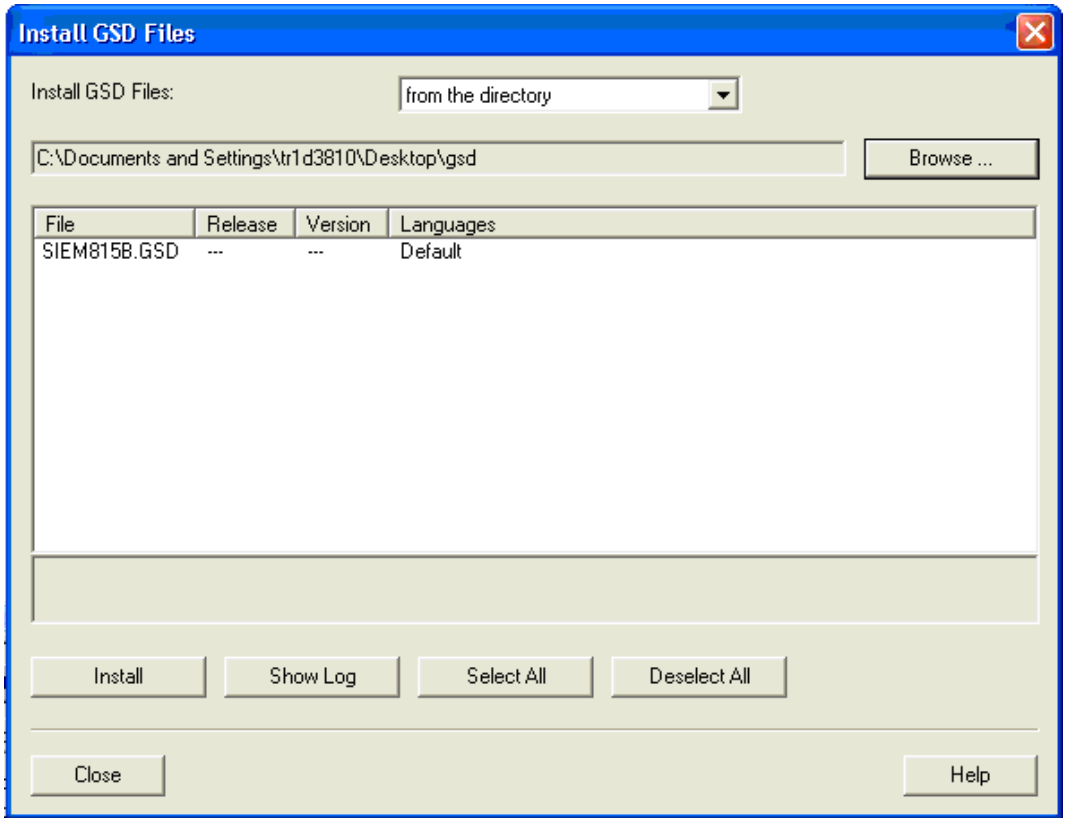

3. Mark in the selection list the GSD file and press the button "Install".
4. Finish the installation of the GSD file by pressing the button "Close".

6.3.6 Network configuration with SIMATIC Manager

The SIMATIC Manager Step7 is the network configuration tool that will be used to configure the PROFIBUS DP network.

SIMATIC Manager uses GSD files in order to know the properties of the devices in the network configuration. The configuration is then loaded to the PLC for informing the PLC about the PROFIBUS slaves in the network.

After the network configuration is loaded to the PLC, the PROFIBUS communication will be started by the PLC with the configured slaves.

The steps for creating and loading a Step7 project are:

1. Create the project by selecting CPU and organization blocks.
   To do so use the 'New Project Wizard'.
2. Build the network configuration in hardware configuration window and compile.
3. Write the application software for the organization blocks in STL, LAD or FBD.
4. Adjust the PG/PC interface.
5. Download hardware configuration, system data and the organization blocks to the PLC
6. Wait for the PLC to restart.
7. Check the status LEDs on the PLC for a proper PROFIBUS communication. The **Red SF** and **BF** LED**s** must be **off** and the green **RUN** LED must be **on**.

6.3.7 Creation of a new project with SIMATIC Manager

You create a new STEP 7 project using the SIMATIC Manager.

Procedure:

1. Start the operating program "SIMATIC Manager" (Start bar Start ➜ Programs ➜ SIMATIC ➜ SIMATIC Manager).
2. Create a new project in the SIMATIC Manager with the File ➜ "New Project" Wizard menu command. Reaction: The STEP 7 Wizard: "New Project" opens.

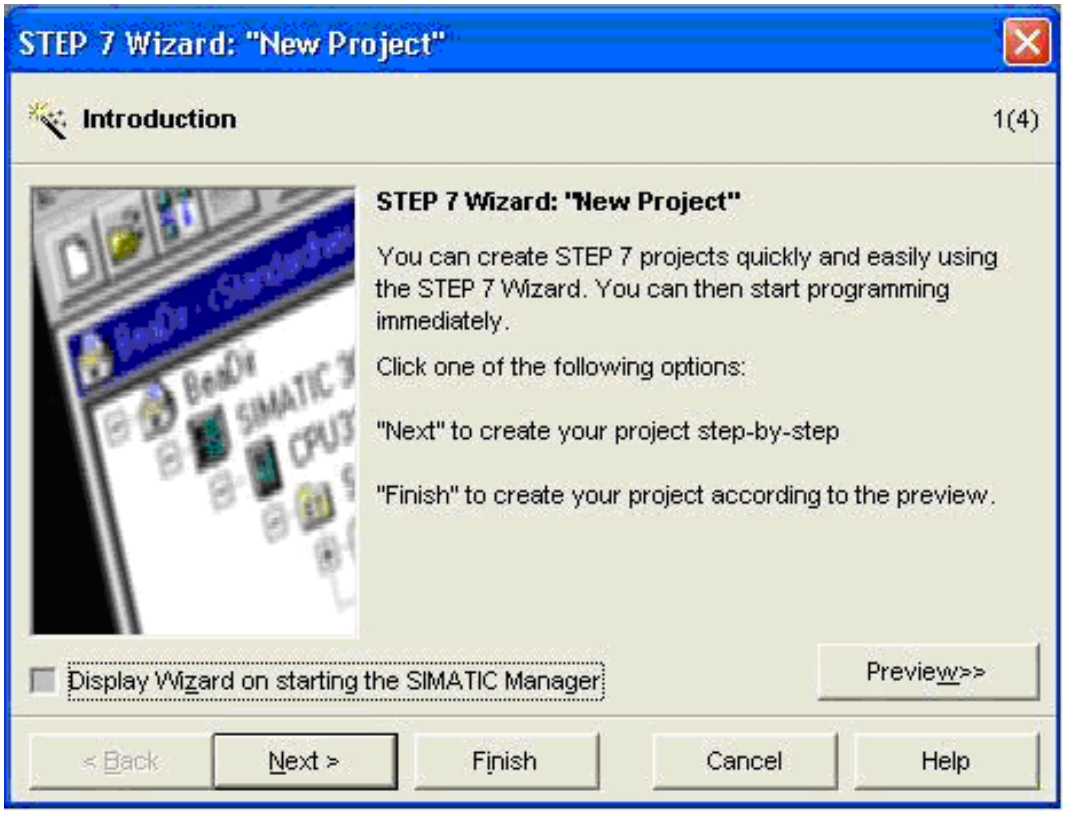

3. Click the button "Next". Reaction: The STEP 7 Wizard: "New Project" opens a dialog box for selecting the CPU.

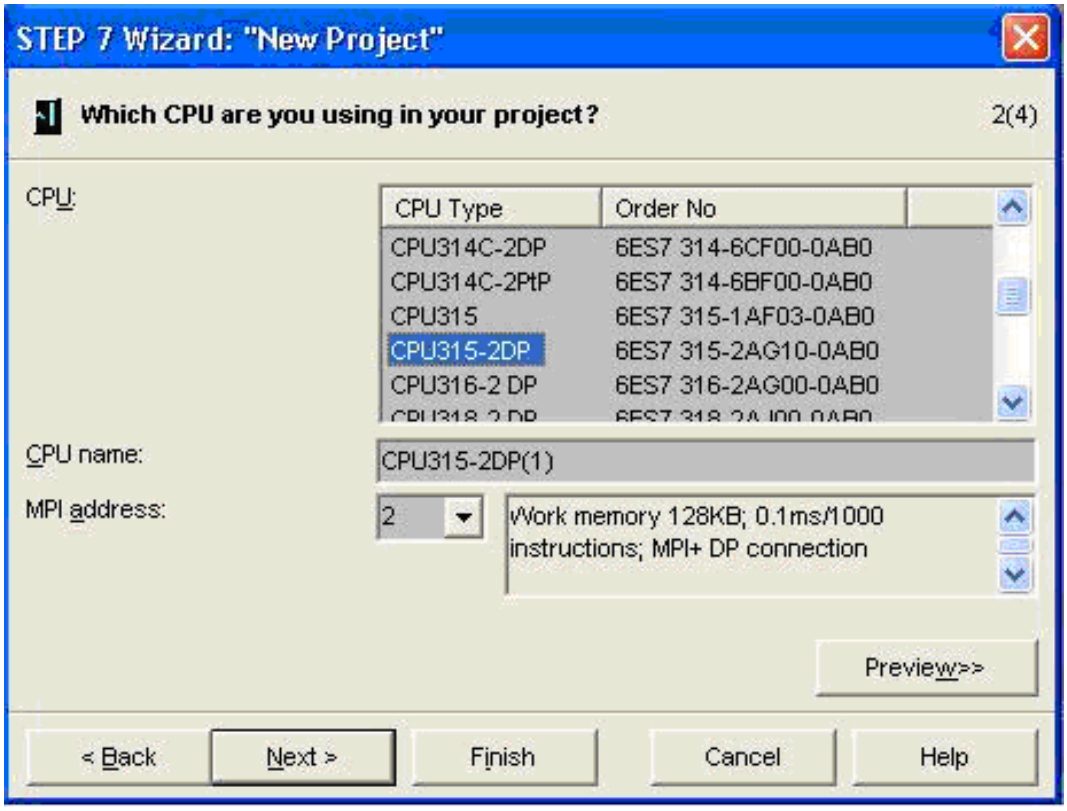

4. Pick your required CPU from the selection list and click the button "Next". Reaction: The STEP 7 Wizard: "New Project" opens a dialog box for selecting the blocks.

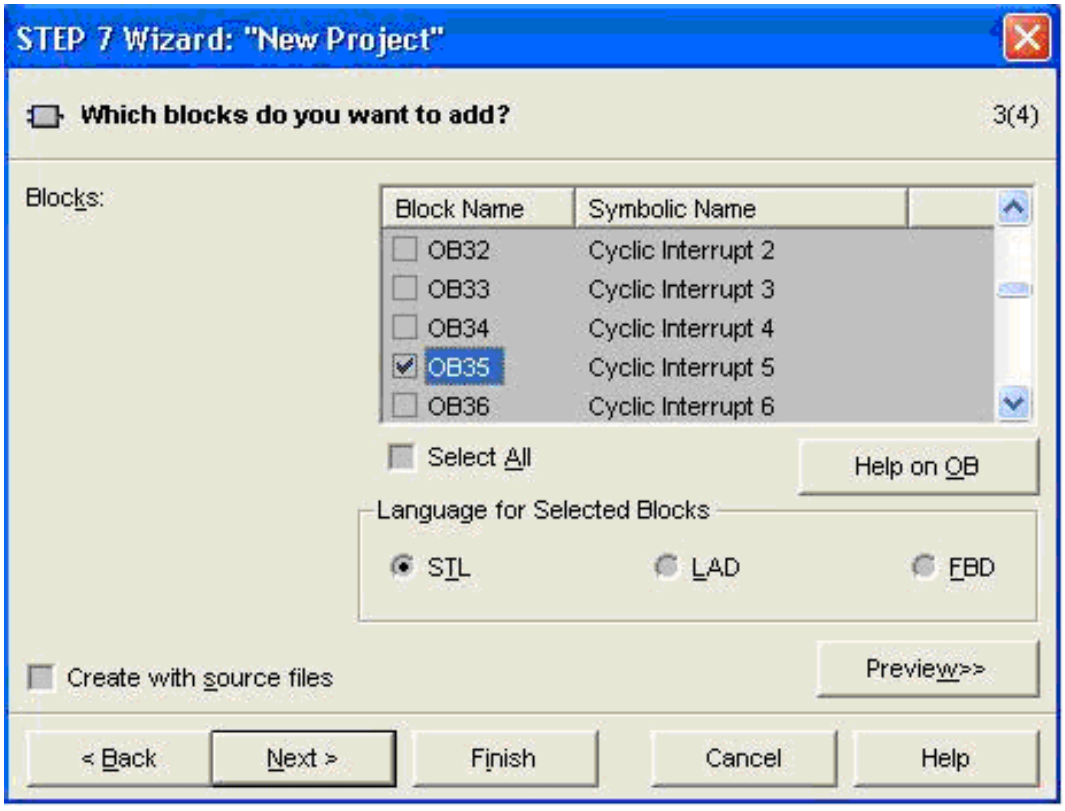

5. In the selection list mark the check boxes for OB1 (program cycle execution block), OB100 (complete restart) and OB35.

Note

- **OB1** is the block which is continuously active in the background.
- **OB100** is the block which is called once during the startup of the PLC.
- **OB35** is the block that is called periodically with a timer interrupt. Its period can be changed. SFC14 and SFC15 are the system functions that are used in OB35 organization block.
- **OB80** to **OB88** are the organization blocks that are used for error situations.

6. Click the button "Next". Reaction: The STEP 7 Wizard: "New Project" opens a dialog box for setting the project name. Type the name or pick an existing one.

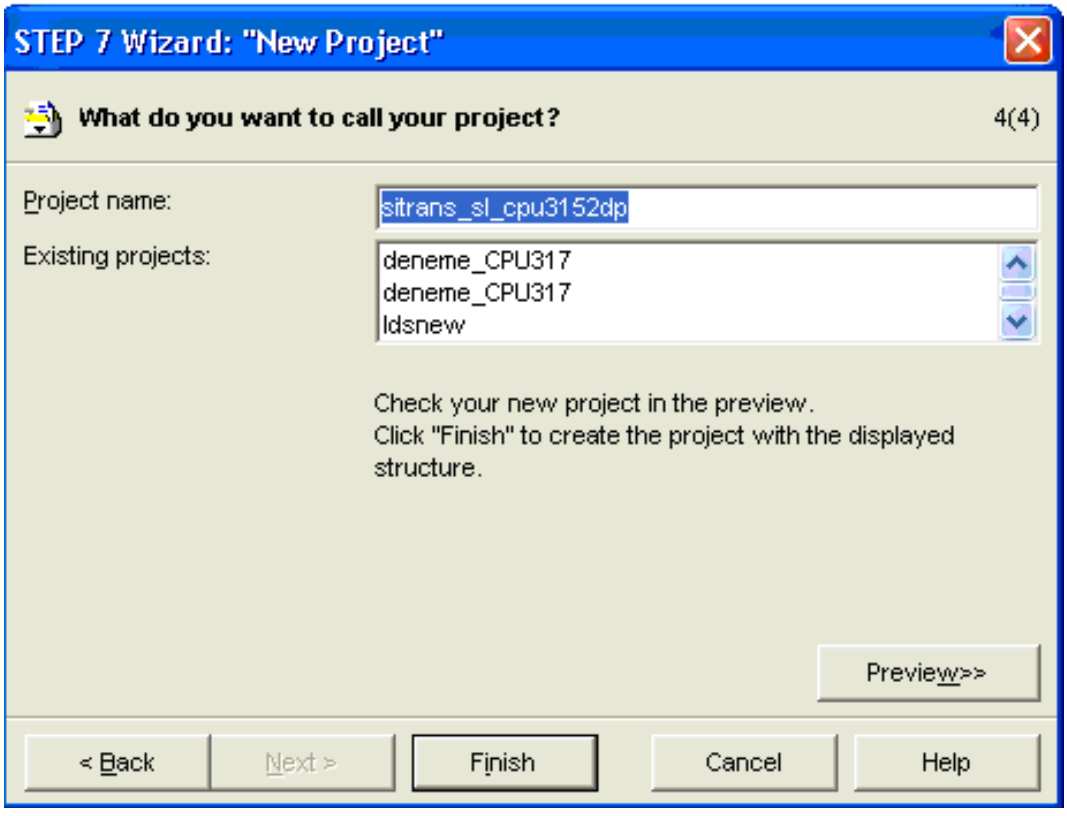

7. Click the button "Finish". Reaction: The STEP 7 project is created with the organization blocks OB1, OB100 and OB35.

- Optionally you can add the organization blocks from OB80 to OB88 with the menu command **Insert** ➔ S7 Block ➔ **Organization Block**.

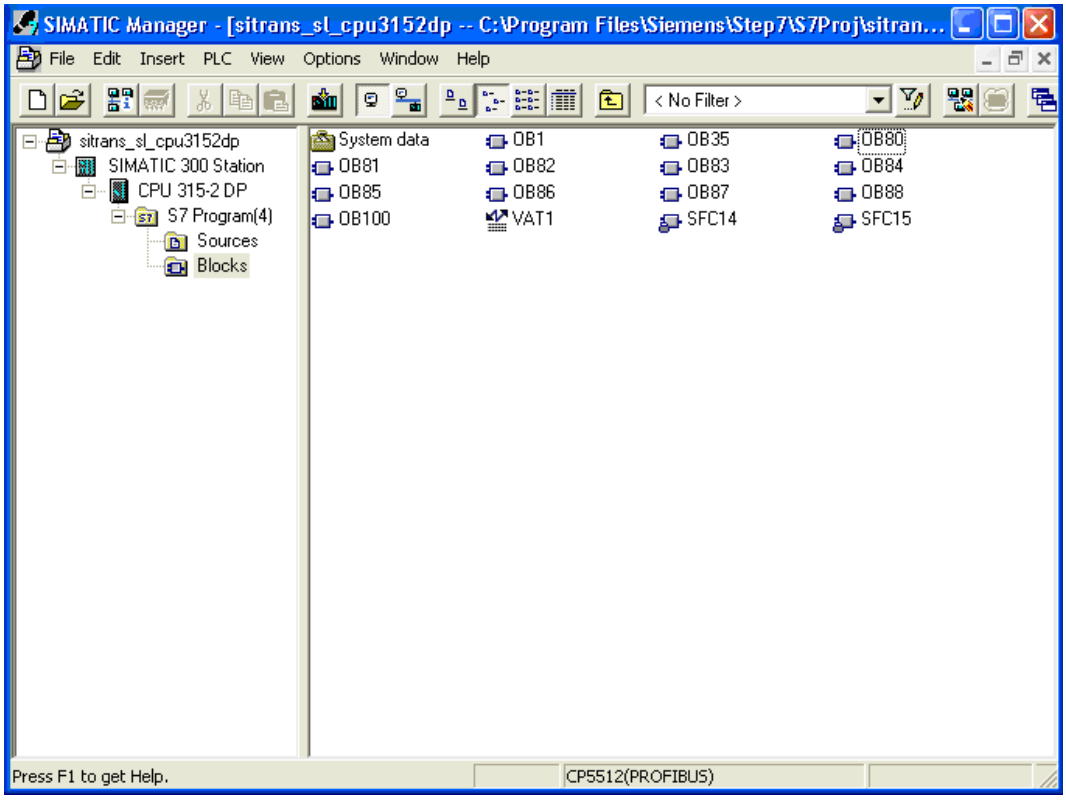

6.3.8 Hardware configuration

Creating PROFIBUS Network

Procedure:

1. Double click on "Hardware" for opening "HW Config" in the selection list on the left hand side of the project window SIMATIC 300 Station.
2. In the selection list mark "(0)UR" DP item.
3. Click with the right mouse button on the DP item and then click on "Add Master System".

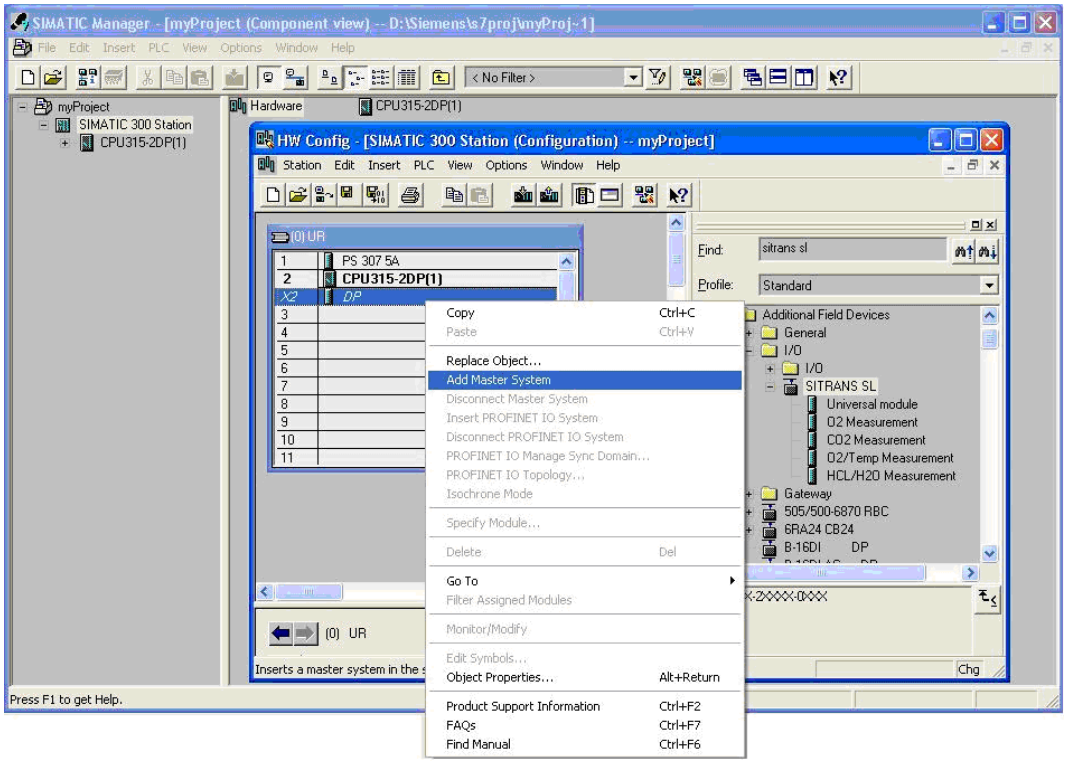

PROFIBUS Network Configuration

1. Mark in the selection list "PROFIBUS(1): DP master system (1)" with the right mouse button.
2. Enter the dialog box 'Network Settings' in "Properties -PROFIBUS"
3. In the selection lists pick your object properties.

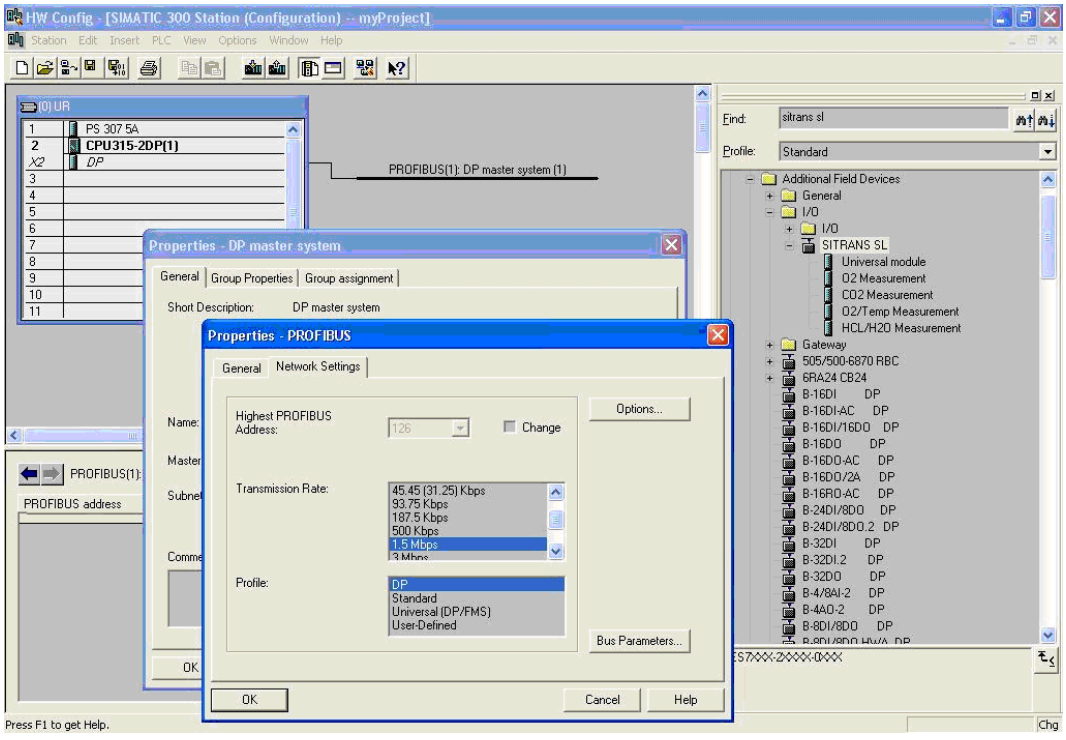

SITRANS SL Configuration

Prerequisite:

- SITRANS SL is selected from the hardware catalog and placed into PROFIBUS DP master system.
- The appropriate measurement type telegram is selected and placed into SITRANS SL slots starting from the first empty slot.

Procedure:

Modify the I/O addresses of the modules to your needs.

1. ´Select the measurement type from the selection list "Selection of the Present Configuration", e. g. O_2 Measurement.

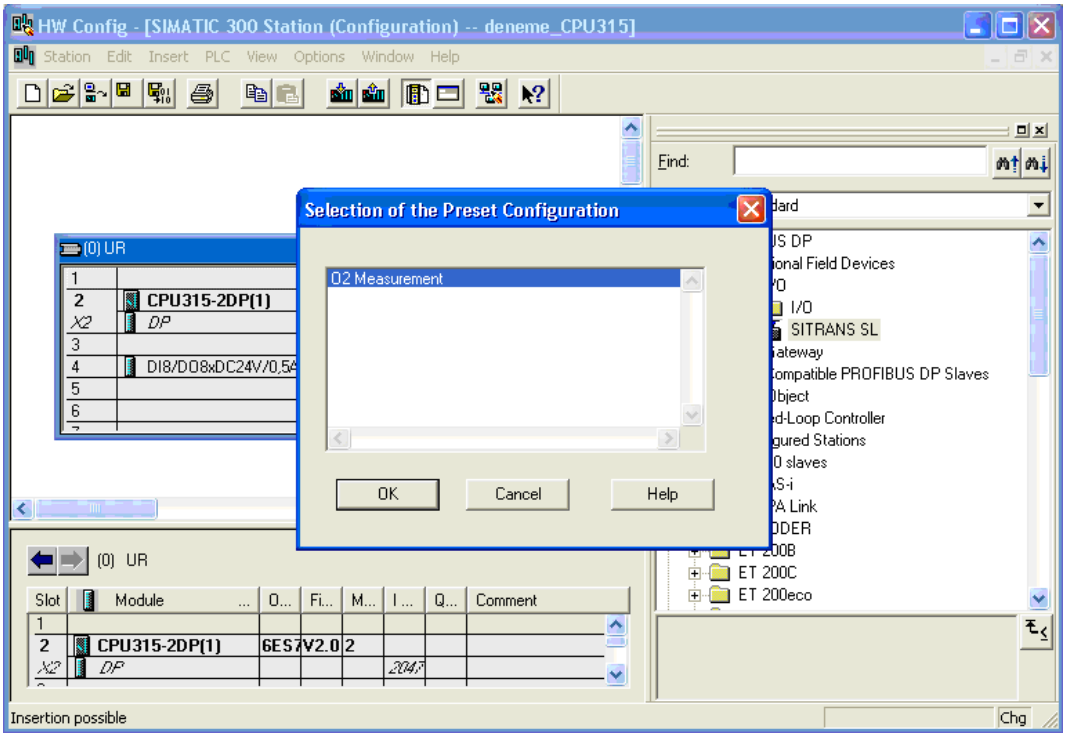

2. Select the subnet type from the selection list "Properties - PROFIBUS interface SITRANS SL".

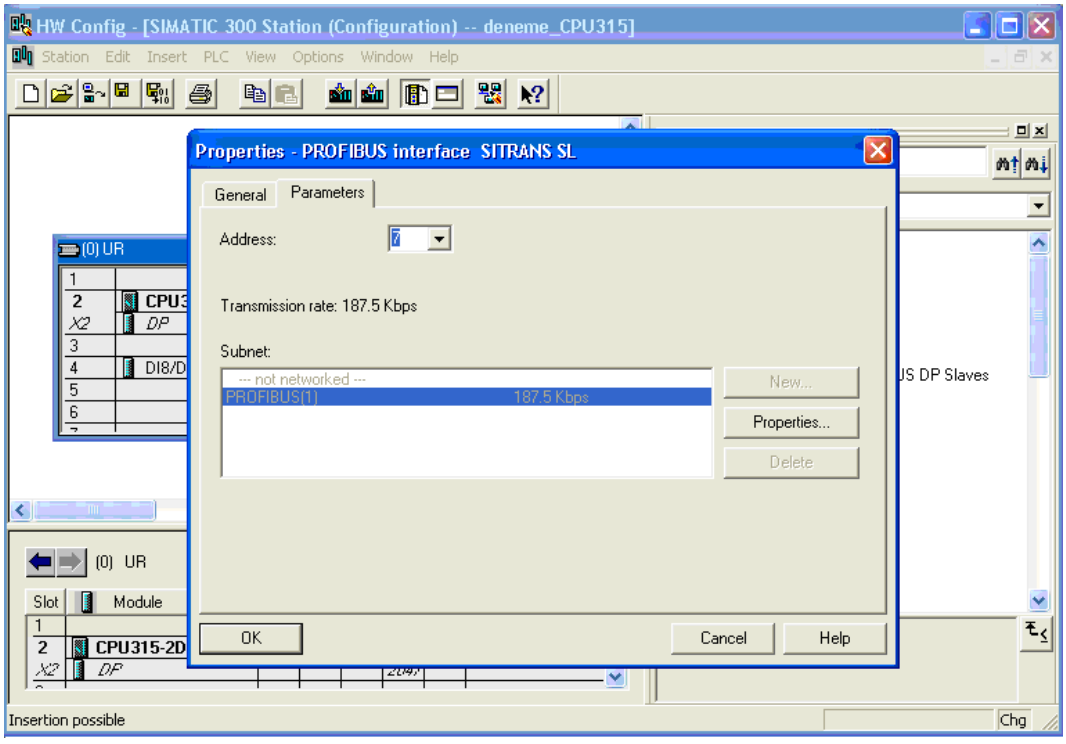

3. In the HW Config window you can check the number of blocks and the address assignment.

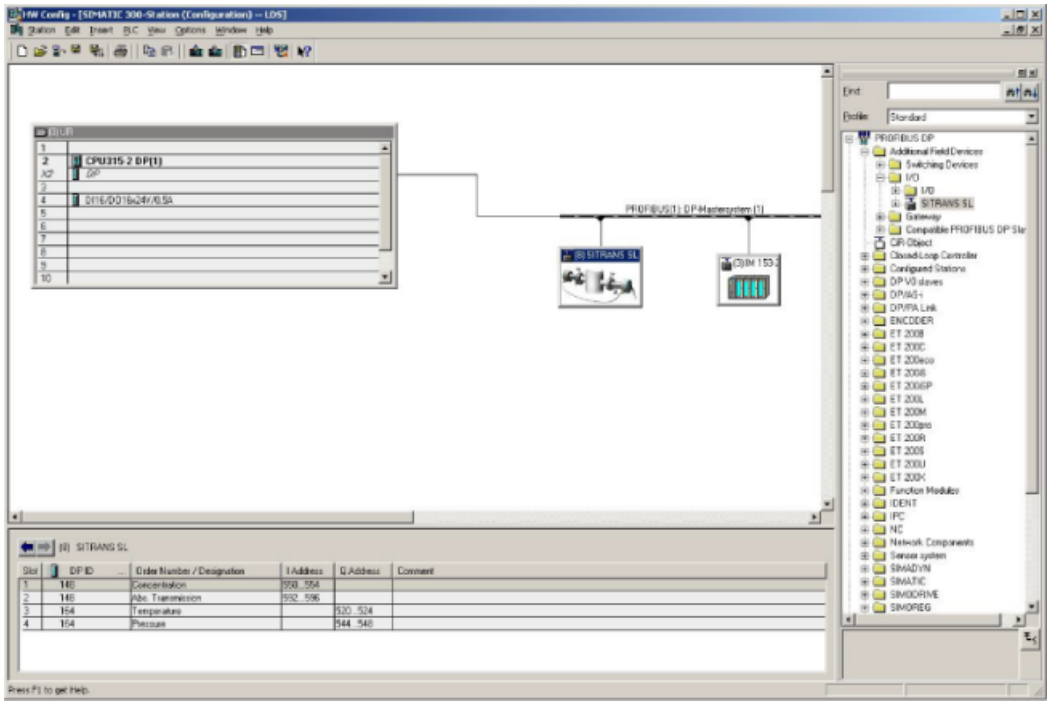

Measurement Type Selection

- *Concentration measurement output*
  First input module in the first slot. Consists of 4 byte float value and 1 byte status value.
- *Transmission value (absolute transmission) output*
  Third input module in the third slot. Consists of 4 byte float value and 1 byte status value.
- *Temperature input*:
  First output module in the fifth slot. Consists of 4 byte float value and 1 byte status value.
- *Pressure input:*
  Second output module in the sixth slot. Consists of 4 byte float value and 1 byte status value.

6.4 Modbus configuration for SITRANS SL

6.4.1 Modbus settings

Modbus settings are configurable via LUI. Detailed information about the parameters can be found in the Generic Modbus device specification.

Default values of the Modbus settings are stored in the ModbusConfig.xml. If these parameters are modified by customers, the modified paramters will be stored in the EEPROM and then be effective.

Table 6-1 Modbus settings

Setting parameter		Default	LUI
Slave ID	1 to 247	1	X
Baud Rate	300 – 115200	19200	X
Parity	None, Even, Odd	None	X
Transmission mode	RTU + ASCII	RTU	X
RTU frame timeout	0 - 600000 ms	50 ms	X
ASCII frame timeout	50 - 600000 ms	1000 ms	X
Application answer timeout	50 - 10000 ms	1000 ms	X
Minimum answer delay time	5 - 1000 ms	20 ms	X
Data Bits	7, 8	8	X
Stop Bits	1, 2	1	X

6.4.2 Byte and word ordering

- The interpretation of the data field within the Modbus RTU protocol is according to the original Modbus Application Protocol Specification "big endian Mode".
- Given that the Modbus RTU message protocol is "big endian", in order to successfully exchange a 32 bit data type via a Modbus RTU message, the endianness of both master and slave must be ensured. SITRANS SL allows specific selection of byte orders, so you must take care that both units are set to the same byte order.

6.4.3 Supported Modbus functions

Modbus defines a set of data and control functions to perform data transfer and slave diagnostic.

The following Modbus functions are implemented:

- 0x01 Read Coils
- 0x02 Read Discrete Inputs
- 0x03 Read Holding Registers
- 0x04 Read Input Registers
- 0x05 Write Single Coil
- 0x06 Write Single Register
- 0x08 Diagnostics, Echo Only (sub function 0)
- 0x0F Write Multiple Coils
- 0x10 Write Multiple Registers
- Enron Modbus Support
  - Support for 32-bit registers via codes 0x03 and 0x10
  - Optional support for offset 0 between frame and application

See also

Modbus interface (Page 152)

Operation

7

The following description contains an overview of the operating functions which you can perform on the device. You can operate the device using the remote control or the local user interface (LUI). This includes the setup of PROFIBUS, Modbus, analog and digital inputs and outputs.

WARNING

Dangerous voltage

Certain parts in the analyzer carry dangerous voltages which can become accessible as a result of an open cover.

- Before you switch on the device make sure that it is properly closed.
- Never open the device during operation

Local user interface (LUI)

The local user interface consists of a digital display and four buttons.

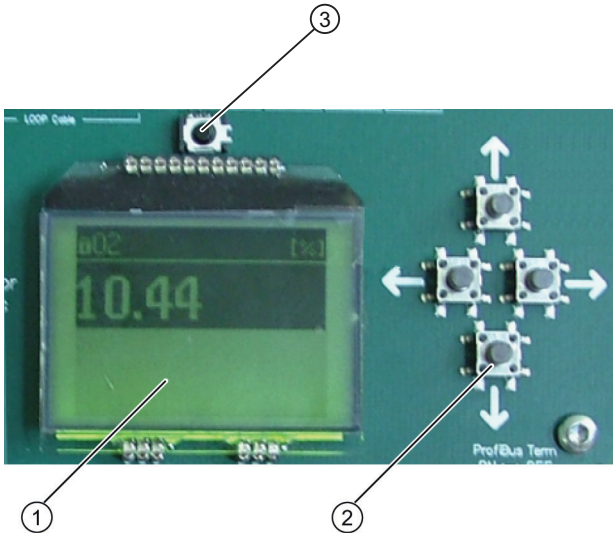

① Digital display (measurement view)
② Buttons
③ Receiver for remote control signals

Figure 7-1 Digital display and buttons

NOTICE

During operation only use remote control

To operate the device directly via the buttons on the LUI PCB you have to unscrew the lid. Doing so airborne substances may intrude into the device thus leading to a possible damage. To avoid this always operate the device using the remote control.

Operations via the buttons on the LUI PCB are only allowed for test and service purposes.

7.1 General

Note

Dynamic behavior of the Local User Interface LUI

The LUI will time out, exit the current menu and return to measurement view when no key has been pressed for 10 minutes. Password-protected functions will be relocked.

Navigating in the menu system

The LUI can be operated either by means of the buttons on the PCB, or preferably by means of the enclosed **remote control**. To enter the menu, press the **right key**.

Table 7-1 Key functions of the menu system

Key functions in the menus		
Menu action	**Key on remote control**	**Key on PCB (lid open)**
Enter menu system	→ (right key) or ↵ (Return key)	→ (right key)
Navigate in menu	↑ (up key) or ↓ (down key)	↑↓ (up down keys)
Select highlighted radio button or toggle highlighted checkbox	→ (right key) or ↵ (Return key)	→ (right key)
Exit current menu (move up in the tree)	← (left key) or Esc key	← (left key)

Editing settings

Parameter settings can be displayed and edited via the LUI. When a setting is selected the first display shows the current setting of the parameter value or in some cases the pair of values. To change a value, select edit and press the **right key**. The edit display shows:

- The current value
- The editing row, where the new value can be typed in
- Upper and lower limits for the parameter value

Note

To enter the Edit display, the LUI must first be unlocked. Any entries of values outside the allowed range are discarded.

Examples



Path length

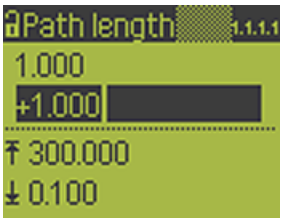

Edit path length

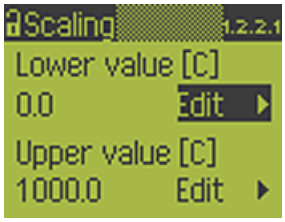

Scaling

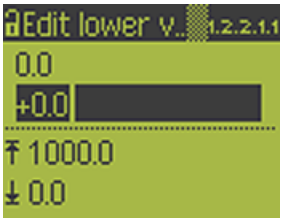

Edit lower value

Table 7-2 Key functions when editing

Edit action	Key on remote control	Key on PCB (lid open)
Move to digit	← and →	← and →
Alter digit	Press digit number key	↑↓
Delete digit	C	Use ↑↓ to select #
Insert	*)	Use ↑↓ to select >
Decimal point	.	Use ↑↓ to select .
+/-	Press +/- (not dependent on cursor position)	Move to the leftmost position, Use ↑↓ to select + or -
Cancel editing	Esc	Move to the leftmost position, then press ←
Confirm edited value	↵	Move to the rightmost position, then press →

*) Can not be done with the remote control. The input must be rewritten.

Saving settings

When a change has been made to a setting the new value is immediately used by the analyzer. The value is however not yet stored permanently, i.e. after a power failure the old value(s) will be used.

To store the new value(s), press left key or Esc key repeatedly to move back to the main menu, then press left key or Esc key once more to exit the menu.

The LUI will now inform that changes have been made and display the save settings dialogue.

Note

After changing the settings exit the menu system and select OK when asked to save the settings.

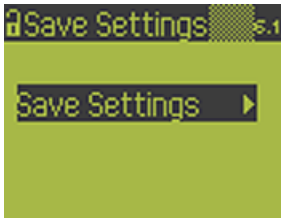



7.2 Measurement views

Measurement view



Gas component, e.g. O_2



Pressure



Temperature

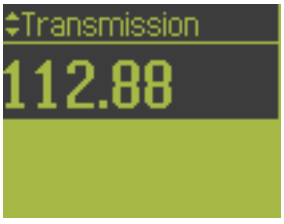

Transmission

When not being edited, the SITRANS SL LUI displays the Measurement view containing the following information:

- Present measured components with corresponding Value and Unit.
- Alarm status icon or icons, if multiple alarms are trigged.
- Alarm text. If multiple alarms are trigged only the most severe is presented by text, while the icon toggles through the list of active alarms.
- To read through the list of active alarms, press the Left Key repeatedly.

The following key functions are available:

- Up/Down – select component to view
- Right – enter menu
- Left – view next active alarm

7.3 Menu system

7.3.1 The menu structure

The main menu is entered by pressing →
To exit press ←
Changes are saved when the main menu is exited.

In the following menu structures white boxes indicate selection screens, grey boxes indicate edit screens, and black (inverted) boxes represent displays without any user interactions.

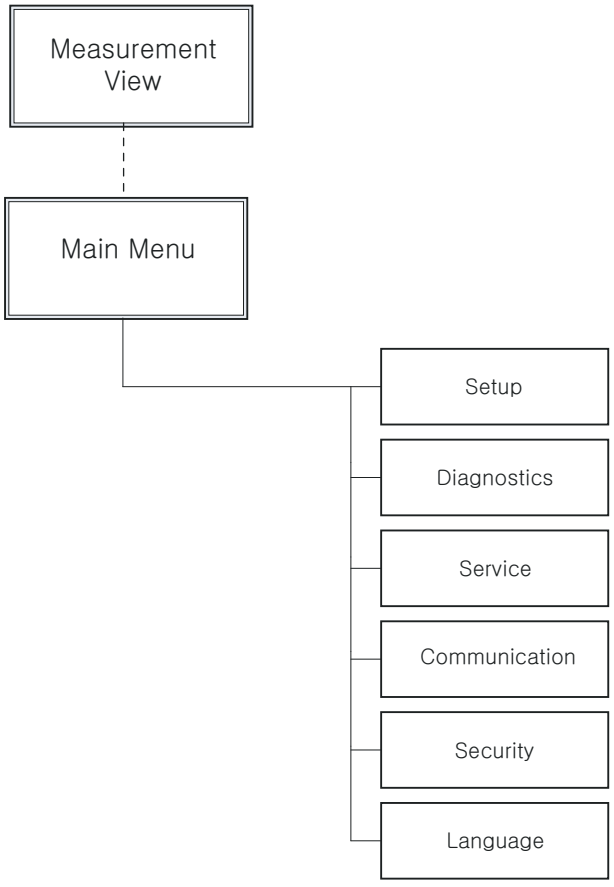

Figure 7-2 The menu system

7.3.2 Setup

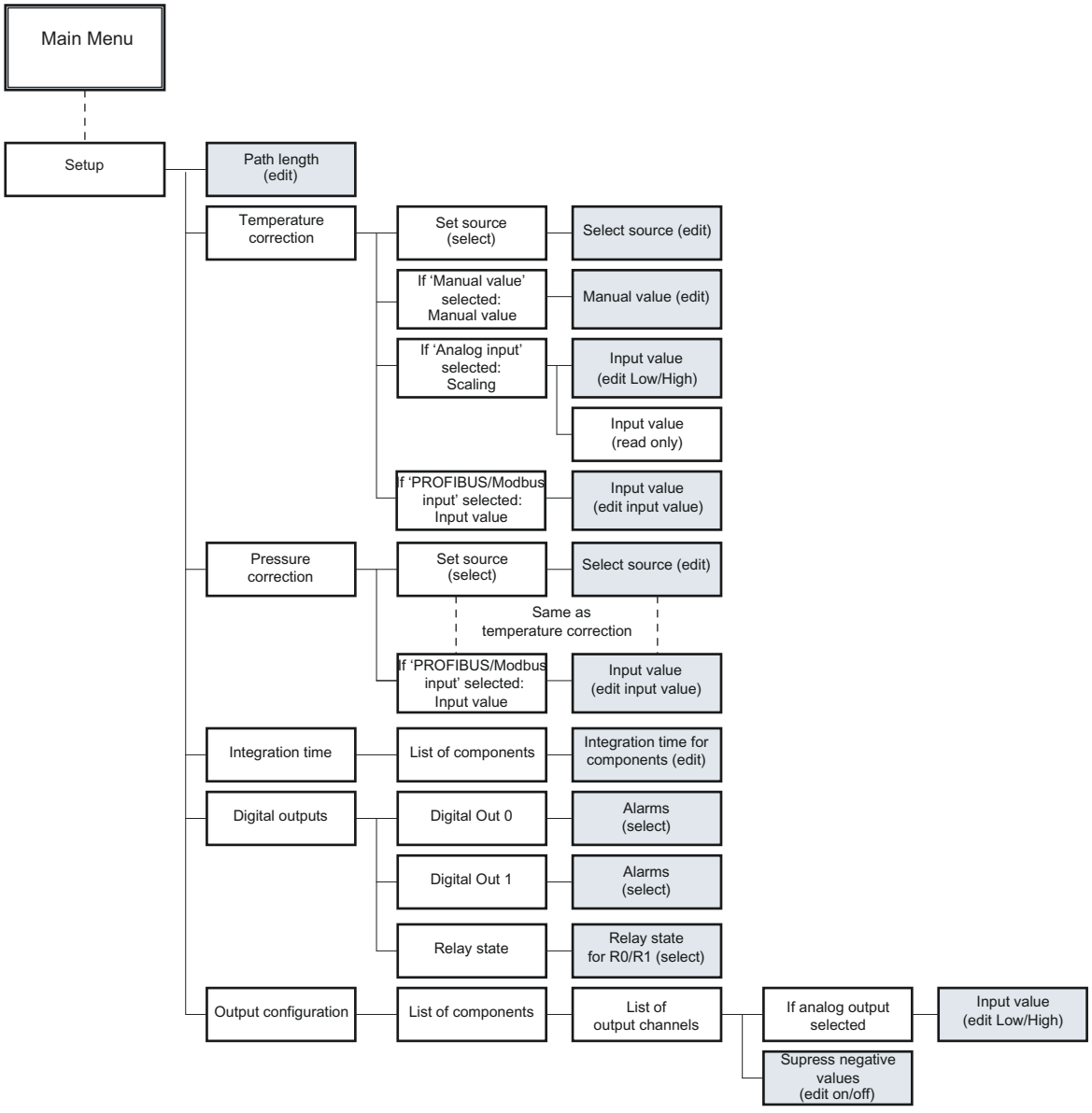

Figure 7-3 The setup menu

Path length

View/edit path length in meters with three decimal digits.

Temperature correction

This menu is dynamic; at first level you're asked to "**Set source"** which then displays a list of all available temperature inputs.

The example in the following display sequence shows the steps to change the source from analog input to manual input.

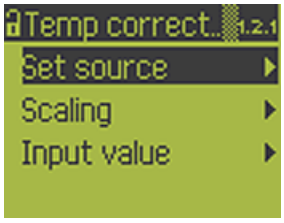

Parameter "Temperature correction" for analog input



Parameter "Set source" in a PROFIBUS device configuration

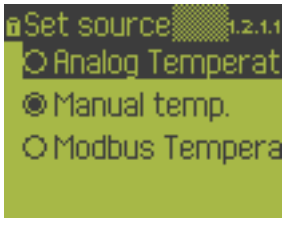

Parameter "Set source" in a Modbus device configuration

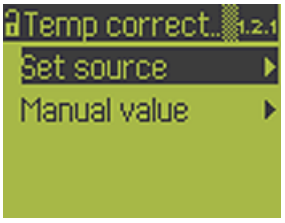

Paramater "Temperature correction" for manual input

Pressure correction

Settings, sequences, and parameters are similar to those of the temperature correction menu.

Integration time

This menu is dynamic and depends on the application. Integration time settings are possible for the following components:

- Measurement component (e.g. O_2, CO)
- Absolute transmission
- Temperature
- Pressure

An averaging filter is connected to each component. For each component the filter parameter "integration time" can be used to balance the needs of response time and noise reduction.

Digital outputs

The digital outputs are realized as relays providing the following functions:

- Assign alarm(s) from the alarm list to a digital output. Possible settings are:
  - M(aintenance) fault
  - M demanded
  - M required
  - P(rocess) V(alue) fault
  - PV warning
  - PV tolerance
  - No data exchange
  - Local override
  - Configuration warning
  - Data exchange
  - Device unlocked

To assign or cancel an alarm use the → (right arrow) button.

- Select state of relay in normal operation
  - "Normally energized" - relay contact for the alarm signal is closed.
  - "Normally de-energized" - relay contact for the alarm signal is open.

"Normal" refers to the normal state of operation of the analyzer. The system is powered and running without any problems, no error signal is generated and displayed.

"Normally Energized" refers to the state of the relay in normal operation. The relay contact for the alarm signal is closed in normal state of operation when checked.

Output configuration

The analyzer produces several measurements, referred to as components. Each component can have several outputs. The measurement view of the LUI is also an output.

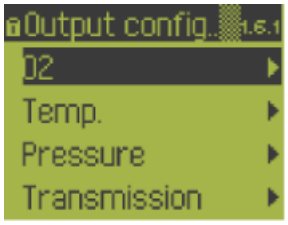

The outputs are arranged by components.

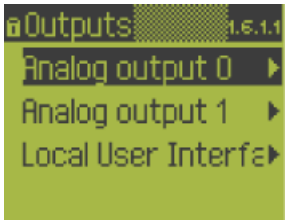

After selecting component a list of all output channels for this component is displayed.

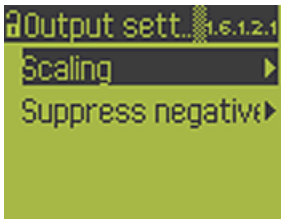

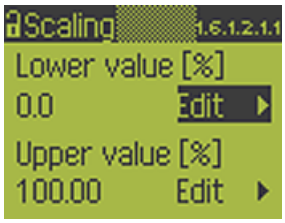

After selecting an output, the settings for this output are displayed. The number of settings available depends on the type of output. In the pictures above an analog output is selected and the parameters 'Scaling' and 'Suppress negative values' can be edited. Before you can start editing the LUI must be unlocked.

Analog output settings

Set scale
Suppress negative values

LUI output settings

Suppress negative values

PROFIBUS output settings

Suppress negative values

Modbus output settings

Suppress negative values

7.3.3 Diagnostics

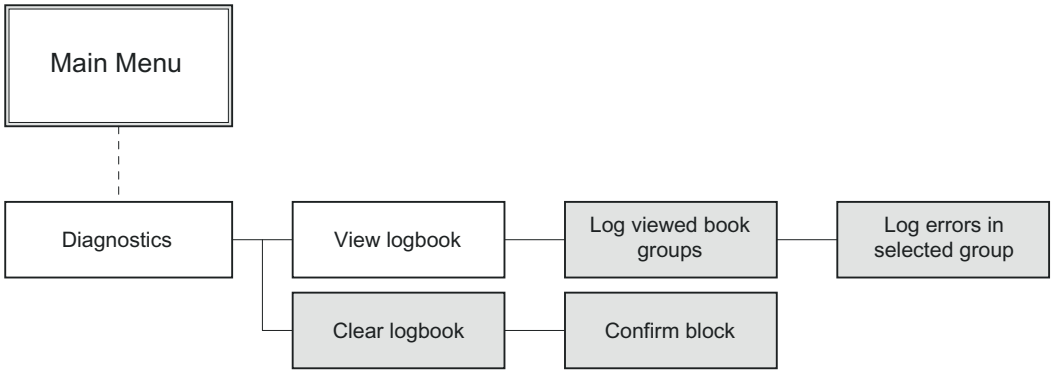

Figure 7-4 The diagnostics menu

View logbook

The condition monitoring functions of the analyzer generates status messages, warnings and alarms. In this text the severity level of the alarm is disregarded and all status information is referred to as alarms. An alarm can go active at a certain time and then passive if the erroneous condition disappears. In the following text an alarm event refers to when an alarm changes state.

When the logbook is opened the groups screen is first displayed, it gives an overview of the analyzers status. To get detailed technical information for a group, highlight the group and press Right key.

The logbook groups screen

The alarms are arranged in groups. The first screen of the logbook displays all groups that have had an alarm event since the logbook last was cleared.

The groups are displayed in a compact format; each row contains the current status, the group name and a time stamp for the last change.

	+ (active) - (inactive)	Group name				Days					Hours			Minutes			Seconds	
Example	+	G	1	0		0	3	8	1	:	0	8	:	1	2	:	3	4

In the example above; an alarm related to a measurement being out of range went active after 381 days, 8 hours, 12 minutes and 34 seconds of runtime. Note that the time refers to systems total run time; the SITRANS SL does not have a real time clock.

The groups are sorted by the time for the last event. The group which last had a change of status is on top of the list. Each group will only appear once in the list, so the group view will not display the entire history.

The logbook details screen

When "details" is opened for a group the underlying alarm log is displayed. The "details" screen gives technical information of the exact cause for the problem.

The alarm events are displayed in the same format as the groups are; with status event, alarm name and the time stamp of the event.

The two possible events for an alarm are:

- Went active (+)
- Went inactive (-)

The size of the logbook is limited and can store 4 events for each individual alarm.

Note that when one alarm within a group goes active the group is active. The group is inactive when all of the underlying alarms are inactive. For this reason there can be alarms within a group that are more recent than indicated by the group's time stamp, i.e. when an alarm within a group becomes active while the group contains active alarms.

Logbook groups and alarms are defined in chapter Alarm, error, and system messages (Page 185).

Clear logbook

Clears the logbook.
Before you use this function the LUI must be unblocked.

7.3.4 Service

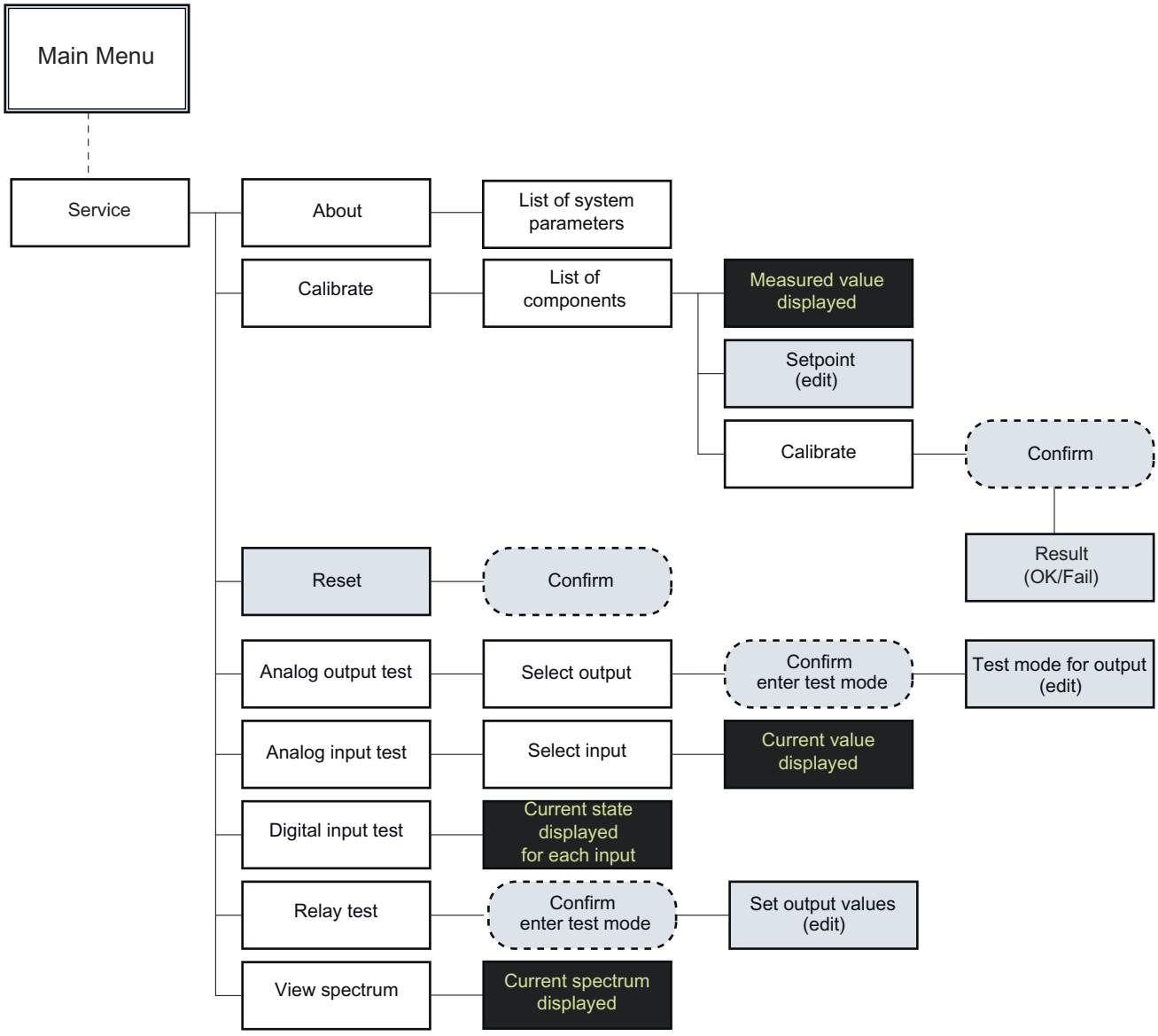

Figure 7-5 Service menu

About SITRANS SL

Informative display informs about the following system parameters:

- Analyzer serial number
- Analyzer revision
- Application name
- Software Version
- MLFB (order) number

- Transmitter FPGA
- Receiver FPGA
- Transmitter PLD
- Junction PLD

Calibrate

NOTICE
Never use this function without having contacted Siemens service first! Inappropriate use of this function may seriously affect the accuracy of the analyzer.

After selecting one of the gas components to be calibrated the calibration menu is displayed providing the following options:

- Measured value - displays currently measured value
- Setpoint – edit setpoint
- Calibrate – perform (or cancel) calibration

Reset

Reset the analyzer
This action requires confirmation before it is started.

Analog output test

Select output to test:

- Analog out 0
- Analog out 1

Once an output has been selected a confirmation is requested before test mode is entered. After confirmation the output current is displayed and can be edited.

Analog input test

Select input to monitor

- Analog temperature input
- Analog pressure input

The current reading for the selected input is displayed and continuously updated.

Digital input test

Sitrans SL provides one configurable binary input for quality information of external sensors. This binary input is mapped within the application software to input 0 and input 1. Both inputs are displayed and continuously updated.

Relay test

The test mode will override the actual output values of the analyzer. The user is asked for a confirmation before test mode is entered.

The two relays are represented by check boxes, where X represents an active signal on the relay (i.e. relay de-energizes)

View spectrum

Displays the spectrum as a graph

7.3.5 Communication

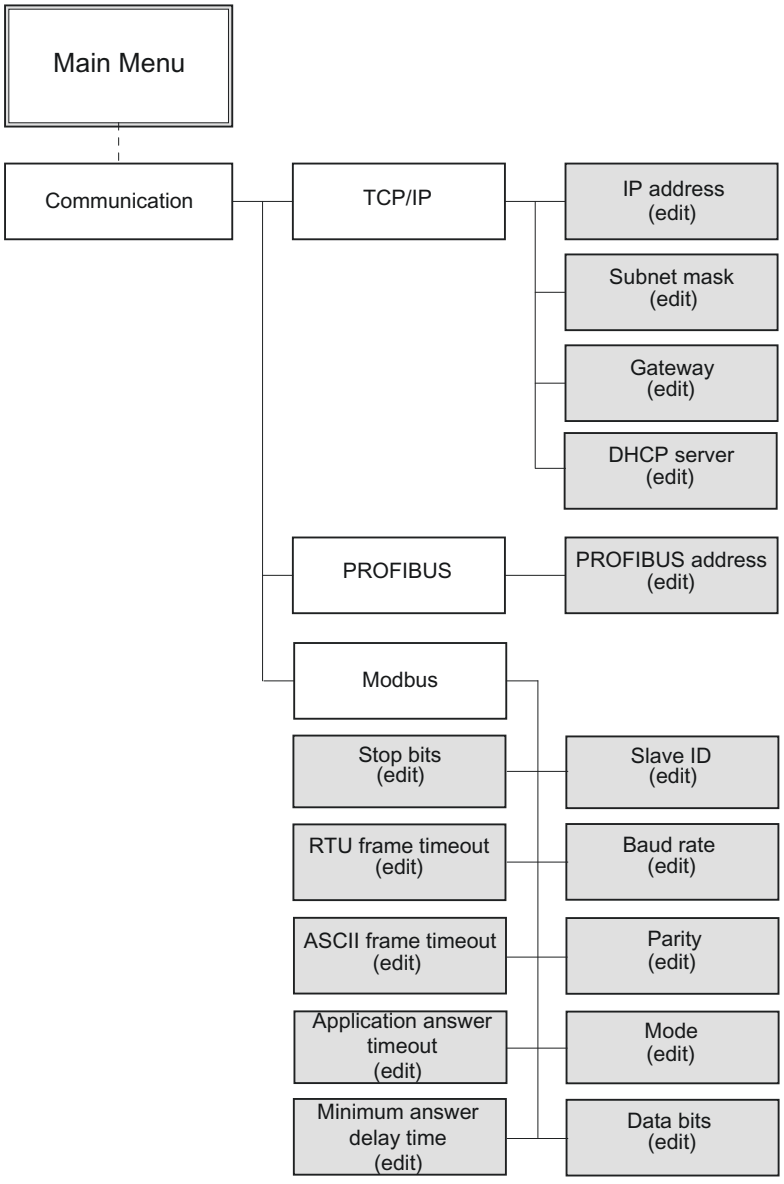

Figure 7-6 The communication menu

Note

You can configure only Modbus or PROFIBUS parameters when SITRANS SL has been setup with the respective communication interface.

TCP/IP

Menu leads to editing screens for the setting of

- IP Address
- Subnet Mask

- Gateway
- DHCP server (enable/disable)

PROFIBUS

Menu leads to the editing screen for the setting of

- PROFIBUS address

After changing the parameter the analyzer must be reset before the new setting takes effect.

Modbus

see Modbus settings (Page 123)

7.3.6 Security

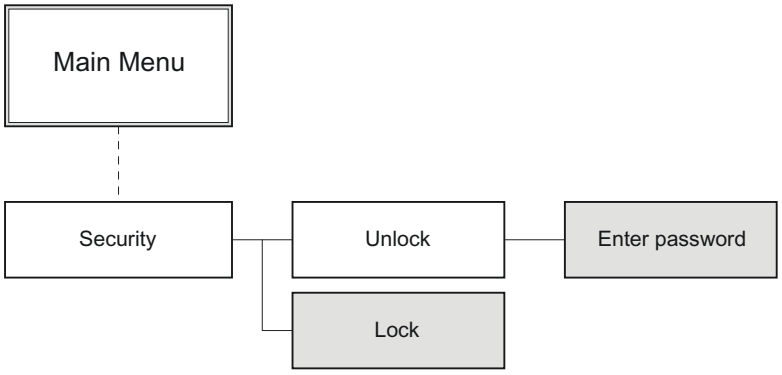

Figure 7-7 The security menu

Unlock

Enter password "111" to unlock write protection. This enables editing of the settings available in the LUI.

Lock

Locks the LUI. Settings can be viewed but not edited.

Indicator

The state of the menu (locked/unlocked) is indicated by a symbol in the upper left corner of the display (means locked, means unlocked).

Operating hours

Operate the LUI using the buttons of the remote control:

- Press → to open the menu
- Select Security, unlock and enter the password.
- Now select Diagnostics and open the log book.
- Select G6
- The alarm E61 (LUI unlocked) is now active.
- The time stamp for this alarm is the system run time, Operating hours (DDDD HH:MM:SS).

7.3.7 Language

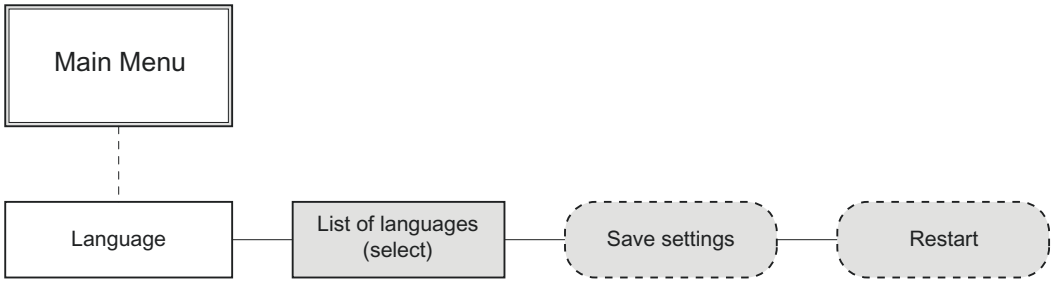

Figure 7-8 The language menu

Select language from the list of available languages.

After change of language the analyzer must save settings (user confirmation) and then restart (user confirmation) before the new setting takes effect.

Interfaces to automation systems

8

8.1 PROFIBUS DP interface

Note

You can obtain further information from the PROFIBUS user organization or on the Internet at (www.profibus.com).

8.1.1 PROFIBUS installation

When you use the PROFIBUS DP interface then use the designated PROBIBUS DP cable, e.g. the PROFIBUS DP hybrid cable which includes instrument power and ground conductors.

Cable requirements

Type-A PROFIBUS hybrid cable with conductors for supply voltage and protective earth. The IECEx variant is delivered with 3m of PROFIBUS hybrid cable mounted.

Connecting to the bus

To install the SITRANS SL as the single or as the last device of a PROFIBUS segment:

1. Ensure that the termination resistor is turned on.
2. Connect the PROFIBUS hybrid cable to the SITRANS SL receiver.
3. Use a junction box to connect PROFIBUS network and power to the PROFIBUS hybrid cable.

To install the SITRANS SL as a device in-between other devices on a PROFIBUS segment:

1. Ensure that the termination resistor is turned off.
2. Connect the PROFIBUS hybrid cable to the SITRANS SL receiver.

3. Use a junction box to connect supply voltage to the PROFIBUS hybrid cable.
4. For connecting the SITRANS SL to the PROFIBUS segment there are two options:
   – Active bus tap-off: Use a bus terminal, repeater or an active cable to make the T-connection. In a hazardous environment the repeater used must either be certified for use in a hazardous environment or be placed in a safe zone.
   – Passive bus tap-off (stub-wire): Connect the SITRANS SL directly to the PROFIBUS segment.

   Note

   Note that the hybrid cable will become a stub-wire of the PROFIBUS segment.

   This solution should only be considered by experienced PROFIBUS users, and if the network segment is known to have good quality. According to the PROFIBUS standard, the total length of stub-wires in a PROFIBUS segment must be less than 6.6 m at 1.5 Mbit/s provided that Type A cable is used. For higher bitrates, stub-wires shall not be used.

Reference Voltage

- **Grounded reference voltage system**
  This is the standard arrangement for PROFIBUS DP devices, where the shield of the PROFIBUS cable is connected to protective earth (PE) at every device.
  To achieve this in the SITRANS SL, connect screw terminal 15 (PROFIBUS shield) to screw terminal 24 (Ground) in the SITRANS SL Receiver.
- **Non-Grounded reference voltage system**
  To achieve this in the SITRANS SL, ensure that screw terminal 15 (PROFIBUS shield) is connected only to the shield of the PROFIBUS cable. Ensure that the shield of the PROFIBUS cable is not connected to the chassis at the cable gland.
  The SITRANS SL is equipped with a standard R/C circuit between PROFIBUS shield and protective earth (PE) in order to improve interference immunity for non-grounded reference voltage systems.

Safe operation

For safe operation of PROFIBUS DP note the following points:

- Observe the general PROFIBUS guidelines for installation.
- When installing the SITRANS SL as the only analyzer, or as the last analyzer in a PROFIBUS DP network:
  – Ensure to switch on the PROFIBUS termination. The switch is found next to the screw terminals in the receiver unit.
- When installing the SITRANS SL on a PROFIBUS DP network, where there are subsequent devices:
  – Ensure to switch off the PROFIBUS termination. The switch is found next to the screw terminals in the receiver unit.
  – As the SITRANS SL connection cable will be a stub wire of the PROFIBUS DP network, keep the length of the stub wire as short as possible and verify that the total length of stub wires is not exceeded in the network for the baud rate used.

8.1.2 Device data base files (GSD)

PROFIBUS DP requires files for cyclic data transmission which you can download from the SIEMENS internet support site (http://support.automation.siemens.com)

`siem815b.gsd` (9 KB) *DP independent language*

`siem815b.bmp` (18 KB) *Bitmap Device*

8.1.3 Technical data

PROFIBUS DP (according to EN 50170)

Baud rates: 9.6, 19.2, 93.75, 187.5, 500 kBit/s, 1.5 MBit/s, 3 MBit/s

8.1.4 Cyclic data transmission over PROFIBUS

8.1.4.1 Cyclic data structure

Specific parameters physical block for passive bus tap-off

The following user data can be exchanged cyclically using the PROFIBUS.

Parameter name	Meaning	Direction seen from gas analyzer	Data type	Length in byte
Concentration	Measured value and status.	Output	DS-33	5
Transmission	Measured value and status.	Output	DS-33	5
Pressure	Process pressure in mbar.	Input	DS-33	5
Temperature	Process temperature in Celsius Degree.	Input	DS-33	5

DS 33 data type

Each value is represented as a 5 bytes value. The first four bytes build the measurement value, transmitted according to IEEE-754. The fifth byte is used for status.

Byte 1	Byte 2	Byte 3	Byte 4	Byte 5
Value in IEEE-754 floating point				Status
Exponent		Fraction		-
MSB		-		-

8.1.4.2 Quality byte

Meaning of status

A status byte is transmitted synchronously in addition to each of the measured values in the DS-33 data structure. This byte provides indication of the quality for this value in a "quality code". Due to this it is henceforth referred to as "quality byte".

The quality byte has the following structure:

MSB							
7	6	5	4	3	2	1	0
Quality		Sub status				Limits	
0	0						bad
0	1						uncertain
1	0						good
1	1						good (cascaded)
		Output value: Sub status is always set to 0. Input value: Sub status is not evaluated.					
						0	0 OK
						0	1 low limited
						1	0 high limited
						1	1 constant

Figure 8-1 Quality byte coding

Note

Error codes and alarm list

For explanation and action of error codes and the alarm list refer to chapter Alarm, error, and system messages (Page 185) .

Quality byte coding for measurement output:

Status coding for "bad quality"			
Dec	**Hex**	**Cause**	**Remedy**
00	00	Maintenance fault or process value fault.	See alarm list.

Status coding for "uncertain quality"			
Dec	**Hex**	**Cause**	**Remedy**
64	40	Maintenance demanded or process value warning or process value out of tolerance.	See alarm list.

Status coding for "good quality"			
Dec	**Hex**	**Cause**	**Remedy**
128	80	Normal operation.	You can evaluate the measured values.

Quality byte coding of input values for process pressure and process temperature:

Status coding for "bad quality"			
Dec	**Hex**	**Cause**	**Error codes and remedy**
00	00	Quality status of source is bad.	Depending on the PROFIBUS source the quality status is mapped to error code E12 for temperature or E16 for pressure.
01	01	Quality status of source is bad and temp. or pressure is low limit.	Temperature: E12 & E13 Pressure: E16 & E17
02	02	Quality status of source is bad and temp. or pressure is high limit.	Temperature: E12 & E14 Pressure: E16 & E18
03	03	Quality status of source is bad and temp. or pressure is constant.	Temperature: E12 & E15 Pressure: E16 & E19

Status coding for "uncertain quality"			
Dec	**Hex**	**Cause**	**Error codes and remedy**
64	40	Quality status of source is uncertain.	Depending on the PROFIBUS source the quality status is mapped to error code E23 for temperature or E24 for pressure.
65	41	Quality status of source is uncertain and temp. or pressure is low limit.	Temperature: E23 & E13 Pressure: E24 & E17
66	42	Quality status of source is uncertain and temp. or pressure is high limit.	Temperature: E23 & E14 Pressure: E24 & E18
67	43	Quality status of source is uncertain and temp. or pressure is constant.	Temperature: E23 & E15 Pressure: E24 & E19

Status coding for "good quality"			
Dec	**Hex**	**Cause**	**Error codes and remedy**
128	80	Ok	
129	81	Quality status of temp. or pressure is low limit.	Depending on the PROFIBUS source the quality status is mapped to specific error code for temperature or pressure. Temperature: E13 Pressure: E17

Status coding for "good quality"			
130	82	Quality status of temp. or pressure is high limit.	Temperature: E14 Pressure: E18
131	83	Quality status of temp. or pressure is constant.	Temperature: E15 Pressure: E19

8.2 Modbus interface

Note

You can obtain further information from the Modbus IDA user organization or on the Internet at the Modbus internet site (www.modbus.org).

8.2.1 Modbus installation

Connection via RS485 interface

The SITRANS SL gas analyzer provides Modbus communication to a PC or an automation system via an RS485 interface.

The SITRANS SL gas analyzer may be connected to a network. Such a network is normally built as a bus topology which needs to be terminated via RC termination plugs. The same applies to a point-to-point connection.

In a physical network up to 32 SITRANS SL analyzers may be connected to a Modbus system via the RS485 interface.

Cable type

A two lined twisted pair cable with shielding is used for the Modbus connection. The maximum cable length is limited to 1200 m.

Signal converter

If the PC has no RS485 interface, an RS232/RS485 signal converter must be linked between the PC and the Modbus network.

Termination resistor

The termination resistor on the junction board must be switched off.

Connection

- Data (N) = PROFIBUS A (electric connector 13 on junction board of SITRANS SL)
- Data (P)= PROFIBUS B (electric connector 14 on junction board of SITRANS SL)
- Shield= PROFIBUS shield (electric connector 15 on junction board of SITRANS SL)

Performance requirement

The minimum access interval from Modbus master is >100 ms.

8.2.2 SITRANS SL Modbus map for gas measurement

Information from the SITRANS SL can be transferred to a PC/PG via the Modbus. Measurement values, status signals and also signals of analog and digital inputs and outputs are thus available for further usage.

Overview of used register numbers (Standard Modbus)

Modicon-modbus-address	Type	Data Address	Description
30001	Input Register (R)	0	Process data
30101	Input Register (R)	100	Device Status
40001	Holding Register (R+W)	0	Input process data

Example

The first Holding Register, number 40001, has the Data Address 0000. Offset is 1.

Overview of used register numbers (Enron Modbus)

Modicon-modbus-address	Variable type	Data Address	Description
3001	16 bit Short integer (R+W)	3000	Process data
5001	32 bit Long integer (R+W)	5000	Process data
7001	32 bit Floating point (R+W)	7000	Process data

8.2.3 Quality byte coding

Overview quality byte coding

The Modbus quality byte has the same structure and meaning as the one used for PROFIBUS.

Structure and meaning of quality byte:

MSB

7	6	5	4	3	2	1	0	
Quality		Sub status				Limits		
0	0							bad
0	1							uncertain
1	0							good
1	1							good (cascaded)
		Output value: Sub status is always set to 0. Input value: Sub status is not evaluated.						
						0	0	OK
						0	1	low limited
						1	0	high limited
						1	1	constant

Figure 8-2 Quality byte coding

Note

Error codes and alarm list

See for explanation and action of error codes and the alarm list chapter Alarm, error, and system messages (Page 185) .

Quality byte coding for measurement output:

Table 8-1 Status coding for "bad quality":

Dec	Hex	Cause	Remedy
00	00	Maintenance fault or process value fault.	See alarm list

Table 8-2 Status coding for "uncertain quality":

Dec	Hex	Cause	Remedy
64	40	Maintenance demanded or process value warning or process value out of tolerance.	See alarm list.

Table 8-3 Status coding for "good quality":

Dec	Hex	Cause	Remedy
128	80	Normal operation	You can evaluate the measured values.

Quality byte coding of input values for process pressure and process temperature:

Table 8-4 Status coding for "bad quality":

Dec	Hex	Cause	Remedy
00	00	Quality status of source is bad	Depending on the PROFIBUS source the quality status is mapped to error code E12 for temperature or E16 for pressure.
01	01	Quality status of source is bad and temp. or pressure is low limit	Temperature: E12 & E13 Pressure: E16 & E17
02	02	Quality status of source is bad and temp. or pressure is high limit	Temperature: E12 & E14 Pressure: E16 & E18
03	03	Quality status of source is bad and temp. or pressure is constant	Temperature: E12 & E15 Pressure: E16 & E19

Table 8-5 Status coding for "uncertain quality":

Dec	Hex	Cause	Remedy
64	40	Quality status of source is uncertain	Depending on the Modbus source the quality status is mapped to error code E23 for temperature or E24 for pressure.
65	41	Quality status of source is uncertain and temp. or pressure is low limit	Temperature: E23 & E13 Pressure: E24 & E17
66	42	Quality status of source is uncertain and temp. or pressure is high limit	Temperature: E23 & E14 Pressure: E24 & E18
67	43	Quality status of source is uncertain and temp. or pressure is constant	Temperature: E23 & E15 Pressure: E24 & E19

Table 8-6 Status coding for "good quality":

Dec	Hex	Cause	Remedy
128	80	Ok	
129	81	Quality status of temp. or pressure is low limit	Depending on the PROFIBUS source the quality status is mapped to specific error code for temperature or pressure. Temperature: E13 Pressure: E17

Dec	Hex	Cause	Remedy
130	82	Quality status of temp. or pressure is high limit	Temperature: E14 Pressure: E18
131	83	Quality status of temp. or pressure is constant	Temperature: E15 Pressure: E19

See also

Quality byte (Page 150)

8.2.4 Modbus adresses

8.2.4.1 Standard Modbus

- The component value is transferred in IEEE 32 bit floating point format. SITRANS SL uses two word registers representing a floating point value.
- The measurement counter is transferred in 32 bit integer format. SITRANS SL uses two Word-Registers representing a 32 bit integer value.
- The time stamp fields (day, hour, minute, and second) are transferred in 16 bit integer format. SITRANS SL uses one word register representing a 16 bit integer value.

Modbus addresses 30000 ... 39999

Modicon-modbus-address	Type	Data Address	Description
30001	Input Register	0	Component 1 – Concentration Measurement counter
30003	Input Register	2	Component 1 – Concentration Quality
30004	Input Register	3	Component 1 – Concentration Value
30006	Input Register	5	Component 1 – Concentration Time stamp – Day
30007	Input Register	6	Component 1 – Concentration Time stamp – Hour
30008	Input Register	7	Component 1 – Concentration Time stamp – Minute
30009	Input Register	8	Component 1 – Concentration Time stamp – Second
30010	Input Register	9	Component 2 – Transmission Measurement counter
30012	Input Register	11	Component 2 – Transmission Quality

Modicon-modbus-address	Type	Data Address	Description
30013	Input Register	12	Component 2 – Transmission Value
30015	Input Register	14	Component 2 – Transmission Time stamp – Day
30016	Input Register	15	Component 2 – Transmission Time stamp – Hour
30017	Input Register	16	Component 2 – Transmission Time stamp – Minute
30018	Input Register	17	Component 2 – Transmission Time stamp – Second
30019	Input Register	18	Component 3 – Pressure Measurement counter
30021	Input Register	20	Component 3 – Pressure Quality
30022	Input Register	21	Component 3 – Pressure Value
30024	Input Register	23	Component 3 – Pressure Time stamp – Day
30025	Input Register	24	Component 3 – Pressure Time stamp – Hour
30026	Input Register	25	Component 3 – Pressure Time stamp – Minute
30027	Input Register	26	Component 3 – Pressure Time stamp – Second
30028	Input Register	27	Component 4 – Temperature Measurement counter
30030	Input Register	29	Component 4 – Temperature Quality
30031	Input Register	30	Component 4 – Temperature Value
30033	Input Register	32	Component 4 – Temperature Time stamp – Day
30034	Input Register	33	Component 4 – Temperature Time stamp – Hour
30035	Input Register	34	Component 4 – Temperature Time stamp – Minute
30036	Input Register	35	Component 4 – Temperature Time stamp – Second
30101	Input Register	100	Overall Device Status
30103	Input Register	102	All Device Status Bits.1
30105	Input Register	104	All Device Status Bits.2
30107	Input Register	106	All Device Status Bits.3
30109	Input Register	108	All Device Status Bits.4

Modbus addresses 40000 ... 49999

Modicon-modbus-address	Type	Data Address	Description
40001	Holding Register	0	Component 3 – Pressure Quality
40002	Holding Register	1	Component 3 – Pressure Value in mbar as IEEE 32 bit value
40004	Holding Register	3	Component 4 – Temperature Quality
40005	Holding Register	4	Component 4 – Temperature Value in °C as IEEE 32 bit value

8.2.4.2 Enron Modbus

This section describes the Enron Modbus register group numbers for the SITRANS SL gas analyzer.

Register numbers are used to identify specific data items to be read or written. Registers are grouped by data type.

The following table depicts SITRANS SL Enron Modbus register group numbers.

Table 8-7 Register groups

Register	Type	Description
3000	INTEGER	16 Bit integers
5000	LONG	32 Bit integers
7000	FLOAT	32 Bit IEEE floating point

Note

Offset

As default, for all Enron Modbus registers the offset between the register number and the data addresses is 1. For example, register number 7001 has data address 1B59 (7001 in decimal).

There is an optional support for an offset 0.

Modbus addresses 3000 ... 3999

Short Integer registers

Short Integer registers are read using function code 03 or set using function code 16.

Table 8-8 Short Integer registers

Enron Modbus address	Access	Data Address	Description
3001	read	3000	Device Status
3002	read	3001	Component 1 – Concentration Quality
3003	read	3002	Component 1 – Concentration Time stamp – Day
3004	read	3003	Component 1 – Concentration Time stamp – Hour
3005	read	3004	Component 1 – Concentration Time stamp – Minute
3006	read	3005	Component 1 – Concentration Time stamp – Second
3007	read	3006	Component 2 – Transmission Quality
3008	read	3007	Component 2 – Transmission Time stamp – Day
3009	read	3008	Component 2 – Transmission Time stamp – Hour
3010	read	3009	Component 2 – Transmission Time stamp – Minute
3011	read	3010	Component 2 – Transmission Time stamp – Second
3012	read	3011	Component 3 – Pressure Quality
3013	read	3012	Component 3 – Pressure Time stamp – Day
3014	read	3013	Component 3 – Pressure Time stamp – Hour
3015	read	3014	Component 3 – Pressure Time stamp – Minute
3016	read	3015	Component 3 – Pressure Time stamp – Second
3017	read	3016	Component 4 – Temperature Quality
3018	read	3017	Component 4 – Temperature Time stamp – Day
3019	read	3018	Component 4 – Temperature Time stamp – Hour
3020	read	3019	Component 4 – Temperature Time stamp – Minute
3021	read	3020	Component 4 – Temperature Time stamp – Second
3101	write	3100	Component 3 – Input Pressure Quality
3102	write	3101	Component 4 – Input Temperature Quality

Modbus addresses 5000 ... 5999

Long Integer registers

Access to long integer data is an extension of the Gould Modbus ASCII protocol. Long Integer registers are read using function code 03

Table 8-9 Long Integer registers

Enron Modbus address	Access	Data Address	Description
5001	read	5000	Component 1 – Concentration Alarm
5002	read	5001	Component 1 – Transmission Alarm
5003	read	5002	Component 3 – Pressure Alarm
5004	read	5003	Component 4 – Temperature Alarm
5101	read	5100	Component 1 – Concentration Measurement counter
5102	read	5101	Component 1 – Transmission Measurement counter
5103	read	5102	Component 3 – Pressure Measurement counter
5104	read	5103	Component 4 – Temperature Measurement counter

Modbus addresses 7000 ... 7999

Floating Point registers

Access to floating point data is an extension of the Gould Modbus ASCII protocol. Floating point registers are read using function code 03 or set using function code 16.

Table 8-10 Floating Point registers

Modicon-modbus-address	Type	Data Address	Description
7001	read	7000	Component 1 – Concentration value
7002	read	7001	Component 2 – Transmission value
7003	read	7002	Component 3 – Pressure output value
7004	read	7003	Component 4 – Temperature output value
7101	write	7100	Component 1 – Pressure input value
7102	write	7101	Component 1 – Temperature input value

8.2.4.3 Modbus alarm list

The status information is transferred in 32 bit integer words. SITRANS SL uses four Word-Registers representing the detailed status information.

Status Word 1

Status Register description			
DWORD	BIT position	Description	Error Code
1	0	"No transmission"	E1
1	1	"Low transmission "	E2
1	2	"Receiver power"	E3
1	3	"Receiver junction power"	E4
1	4	"Transmitter power"	E5
1	5	"Startup procedure active"	E6
1	6	"Shutdown procedure active"	-
1	7	"Line locking failure"	E8
1	8	"Save settings active"	E9
1	9	"Process temp. range"	E10
1	10	"Process pressure range"	E11
1	11	"Ext. temperature bad"	E12
1	12	"Ext. temperature low limited"	E13
1	13	"Ext. temperature high limited"	E14
1	14	"Ext. temperature constant"	E15
1	15	"Ext. pressure bad"	E16
1	16	"Ext. pressure low limited"	E17
1	17	"Ext. pressure high limited"	E18
1	18	"Ext. pressure constant"	E19
1	19	"Ext. temp. source disconnected"	E20
1	20	"Ext. pressure. source disconnected"	E21
1	21	"Laser current lower limit"	-
1	22	"Ext. temperature uncertain"	E23
1	23	"Ext. pressure uncertain"	E24
1	24	"PROFIBUS configuration error"	E25
1	25	"PROFIBUS connection error"	E26
1	26	"PROFIBUS master switch off"	E27
1	27	"PROFIBUS internal error"	E28
1	28	"Temp. comp. file range"	E29
1	29	"Prs. comp. file range"	E30
1	30	"CurveFit temp. file range"	E31
1	31	"CurveFit prs. file range"	E32

Status Word 2

Status Register description			
DWORD	BIT position	Description	Error Code
2	0	"CurveFit gas file range"	E33
2	1	"NH_3 outside range"	E34
2	2	"O_2 outside range"	E35

2	3	"H_2O outside range"	E36
2	4	"HF outside range"	E37
2	5	"H_2S outside range"	E38
2	6	"HCl outside range"	E39
2	7	"HCN outside range"	E40
2	8	"CO outside range"	E41
2	9	"CO_2 outside range"	E42
2	10	"Temp. outside range"	E43
2	11	"CH_4 outside range"	E44
2	12	"FPGA timeout receiver"	E45
2	13	"FPGA timeout receiver junction"	E46
2	14	"FPGA timeout transmitter"	E47
2	15	"Laser unpowered"	E48
2	16	"Transmitter board temperature"	E49
2	17	"Receiver board temperature"	E50
2	18	"Laser board temperature"	E51
2	19	"Detector board temperature"	E52
2	20	"Receiver junction board temperature"	E53
2	21	"Laser vibrator temperature"	E54
2	22	"Analog output test mode"	E55
2	23	"Digital output test mode"	E56
2	24	"EEPROM configuration missing"	E57
2	25	"Save settings failed"	E58
2	26	"Sensor temp. comp. file range"	E59
2	27	"Watchdog reset triggered"	E60
2	28	"LUI unlocked"	E61
2	29	"Hardware inconsistency"	E62
2	30	"A0 outside measurement range"	E63
2	31	"A1 outside measurement range"	E64

Status Word 3

Status Register description			
DWORD	BIT position	Description	Error Code
3	0	"Laser drift"	E65
3	1	"Algorithm error"	E66
3	2	"Measurement quality"	E67
3	3	"Line locking failure"	E68
3	4	"Temp. input comp. file range"	E69
3	5	"Pressure input comp. file range"	E70
3	6	"Reference Fault"	E71
3	7	"Reference Warning"	E72
3	8	"Laser Current Limit"	E73

3	9	"Conc. conc. comp. file range"	E74
3	10	"G init conc. comp. file range"	E75
3	11	"No Reference Line"	E76
3	12	"Detector amplifier overrange"	E77

Status Word 4

Not used.

Service and maintenance

9

When maintaining the sensors:

Check flange and sensor for leakage under maximum pressure conditions.

⚠ WARNING

Discharge of process gas

Due to equipment fatigue or damage process gas might discharge and harm personal and environment.

As soon as any discharge of process gas is noticed:

- shut off pressure source

9.1 Ordering of spare parts

Condition

- You have a Siemens Industry Mall account.

Procedure

1. Open the PIA Life Cycle Portal (https://www.pia-portal.automation.siemens.com).
2. Select the desired language.
3. To find spare parts for your device, do one of the following:
   - Enter the complete order number of your device (e.g. 7ME4633-4KA51-8DC3-Z A05+B11+E06+F11) into the "Product number" field and click "Go".
   - Enter the serial number of your device (e.g. N1KXXXXXXX) in the "Serial number" field and click "Go".
   - If you do not know the product or serial number, search for your device under "Product family".

4. Navigate to the "Spare parts" tab.
   You see the list of spare parts available for your device.

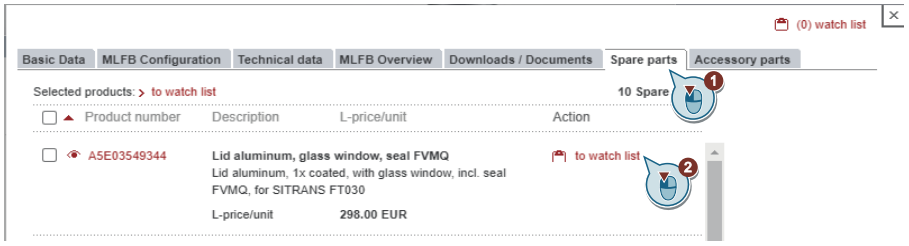

5. Select a spare part and add it to your watch list.
   The watch list opens.
6. Click "Add to cart of Industry Mall".



The Siemens Industry Mall opens and you can order your spare part.

9.2 Accessories

SITRANS SL sensor alignment kit

The SITRANS SL sensor alignment kit includes a battery-operated lamp, a centering aid with crosshair, and two hook spanners for opening the optics tube of the sensors.

⚠ WARNING

Danger of explosions

The SITRANS SL sensor alignment kit is not Ex protected. Therefore it must never be used in a hazardous area without approval by the plant manager!

Verification kit

The SITRANS SL has already been factory-calibrated. If it is necessary to check the calibration, this can be performed using an external verification kit following removal of the transmitter and receiver units. This procedure has no influence on the adjustment of the unit.

The verification kit consists of a verification module and a thermometer. To carry out the calibration verification, the verification module shall be mounted between the transmitter and receiver.

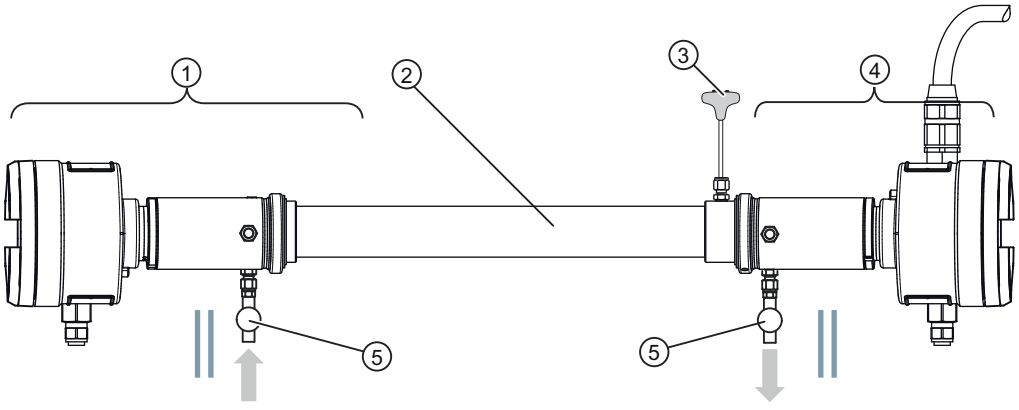

① Transmitter
② Verification tube
③ Thermometer
④ Receiver
⑤ Needle valve

Figure 9-1 Verification setup of SITRANS SL for oxygen applications

Sensor connection cable kit

The sensor connection cable kits consist of:

- a sensor connection cable of specified length (4 x 2, twisted pair)
- a mounting bracket for a junction box

- a receiver junction box
- a receiver junction box cable of 1 m length

Connection cable kit analog, Modbus

The connection cable kits consist of:

- a cable of 3 m length (10 x 2, twisted pair)
- a cable gland 1/2 NPT
- an adaptor 1/2 NPT to 3/4 NPT

Junction box Ex e for 25 cores

The Junction box Ex e for 25 cores is suitable for connection cable kits for Modbus, PROFIBUS or IECEx. It consists of:

- Polyester box 260 x 160 x 91 mm Ex e II T6 (increased safety)
- 2 cable glands M32 for cable diameters from 12 to 21 mm
- 2 cable glands M20 for cable diameters from 5,5 to 13 mm
- 1 cable gland M16 for cable diameters from 5,5 to 10 mm
- 30 modular terminals 2,5 mm^2 (14 AWG)

Connection cable kit PROFIBUS DP

The connection cable kits consist of:

- a certified PROFIBUS DP hybrid cable of 3 m length (1 x 2 + 4 x 1)
- a cable gland 1/2 NPT

See also

Instrument verification (Page 168)

Connecting cables (Page 86)

Alignment of SITRANS SL (Page 90)

9.3 Instrument verification

The SITRANS SL should be verified within the time interval stated in the Technical specifications (Page 203). This procedure can be done by the customer or the Siemens Service.

The verification of the instrument shall only be performed with the appropriate verification kit (see section Accessories (Page 167)).

Each verification process should be documented. For this purpose there are verification sheets included in Verification Sheets (Page 220) of this operating instructions.

If the verification fails, contact Siemens support.

Note

The verification kit is not part of the standard delivery. If you carry out the verification yourself, you have to order the verification kit additionally.

The zero value (the reading when there is no measurement gas in the measurement path) is compensated by the signal processing algorithm.

Note

It is not necessary to verify the zero value in field.

9.3.1 Verification with the verification tube

The verification tube is intended for the oxygen version of the SITRANS SL (SITRANS SL O_2).

Necessary equipment

- Verification kit
- Sensor connecting cable
  If your regular sensor connection cable cannot be removed from the installation, you need a supplementary one.
- A barometer
  to measure the atmospheric pressure

9.3.1.1 Verification tube

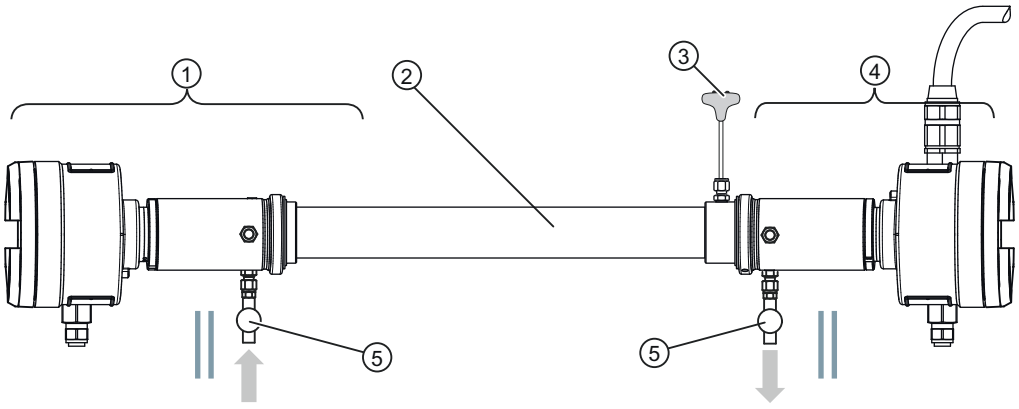

① Transmitter
② Verification Tube
③ Thermometer
④ Receiver
⑤ Needle valves

Figure 9-2 Verification tube setup

The verification tube is an interface between the **receiver** and **transmitter** as shown in the previous figure. The kit comprises a metal tube with a temperature sensor and is mounted between the transmitter tube unit (transmitter) and receiver tube unit (receiver) during verification. Since the verification tube has no windows, the active path will be the one between the lenses on either tube unit. There is a small volume behind the lenses on both sides that must be filled with nitrogen during the verification. The SITRANS SL O2 is designed to allow a small leakage into these volumes, and during normal usage they contain nitrogen. By following the instructions you can assure that they stay filled with nitrogen during the whole verification procedure.

9.3.1.2 Span verification

For the span verification of the instrument follow steps 1 through 7 below. This process should be documented using the form "Verification Sheet" in Appendix A (Page 220).

Step 1: Setup of verification tube

1. Start the procedure by removing the receiver and transmitter from the flanges. Depending on the prevailing safety conditions and what is more convenient, the power may be kept on and the sensor connection cable stay connected, or the power may be shut off and the sensor connection cable be disconnected.

NOTICE
Electric shock Never disconnect the sensor connection cable with the power switched on.

2. Mount the receiver and transmitter on the verification tube.

3. If the analyzer has been moved to a location with a different ambient temperature than that at the installation site, you need to wait until it has been adapted to the new temperature before proceeding from this step. In this way you avoid condensation problems and assure static and homogeneous temperature distribution in the verification tube.
4. If necessary, connect the sensor connection cable between the receiver and transmitter and power up the SITRANS SL.

Step 2: Preparations and LUI settings

In order to document the verification procedure you should fill out the 'Verification sheet' form thoroughly during verification.

1. Make a copy of the "SITRANS SL O2 Verification sheet" form you can find in Appendix A.
2. Fill out the first part (General Information).
3. Enter the password to access the Local User Interface (LUI).

Note

Remember to write down the original values before making alterations to the settings!

4. Note the current integration time in the verification sheet. Set the integration time to 20 s.
5. Note the settings for the path length in the verification sheet. Set the path length to 0.450 m which is the effective length in the verification tube. Notice that this is valid with the in-line reference cell in place.
6. Note pressure source settings and, if applicable, pressure manual value in the verification sheet. Set the pressure source to "manual" and enter the ambient pressure as manual value. Note this value also in the verification sheet.

7. Note temperature source settings and, if applicable, temperature manual value in the verification sheet. Set the temperature source to "manual".
   Note this value also in the verification sheet.

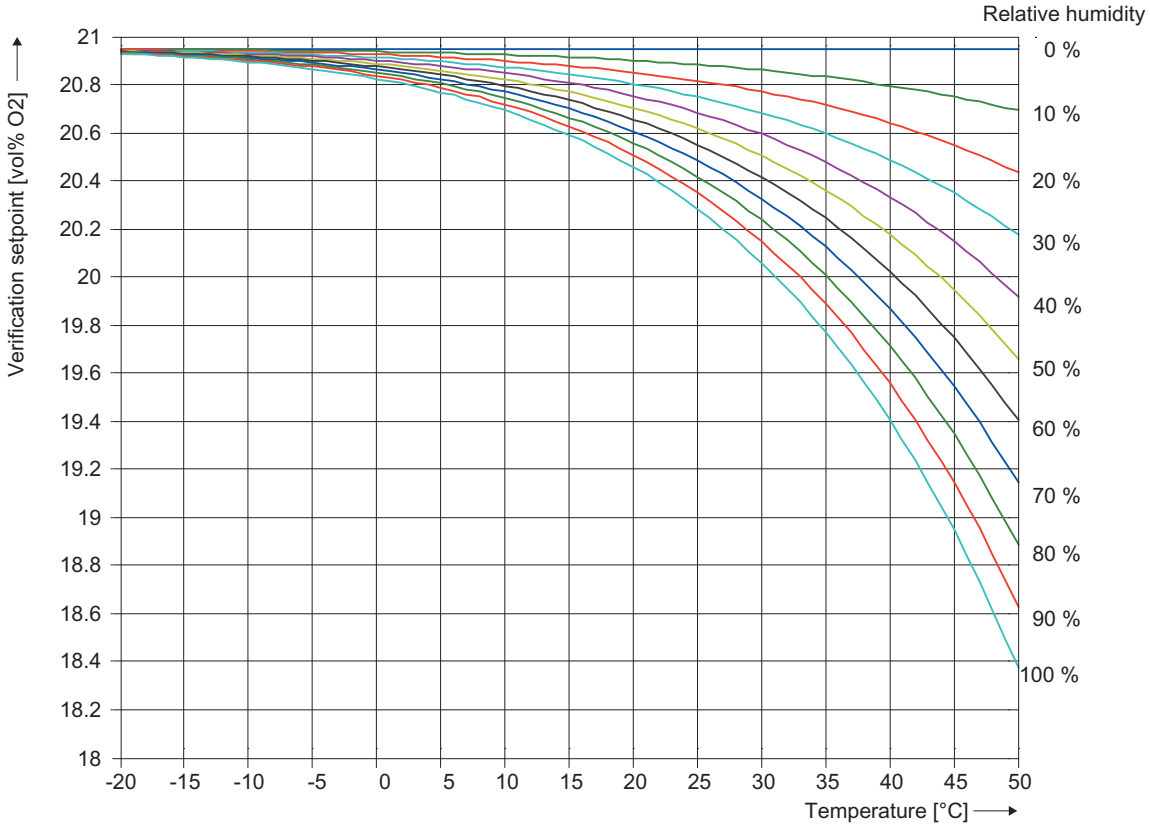

Figure 9-3 Verification set point for different relative humidities and temperatures.

Note

If you do not use dry air, your oxygen concentration is lower due to the air moisture.

8. If you use ambient air, you can correct the verification set point according to the air moisture. Look for the ambient temperature on the x-axis of Fig. 9-2. Go vertically up to the line of the present ambient relative humidity. Go left horizontally and find your verification set point on the y-axis. Note this value in the "Verification Sheet".
   With pressurized air of unknown moisture content there is a higher uncertainty for the verification set point. A good estimate is ±0.3 Vol%. O_2. Note this value in the verification sheet.

NOTICE

Falsification of measurement results

Use a hygrometer and a thermometer at the site where you take the ambient air. The humidity must be measured at the temperature at which the verification is performed. If for example the outside temperature is 0 °C and the relative humidity close to 100 %, the relative humidity indoors at normal room temperature might only be around 20 %.

9. Enter the appropriate values for the verification errors: Instrument error (according to the instrument specifications), temperature error and pressure error.
   Temperature and pressure error depend on your measurement. If the system and the purging gas used have the right temperature you can use the error of the thermometer itself: 1 °C. For the pressure error refer to the reading of your barometer.
10. Calculate the total uncertainty of the measurement by adding instrument error, pressure error, and temperature error.

NOTICE
Temperature and pressure influence on the verification procedure It is very important to enter the accurate values of ambient pressure, temperature and humidity. As a rule of thumb you need the same accuracy of the pressure or temperature values as you expect from verification tolerance. The value of 20.95 % is the relative concentration of oxygen in the atmosphere but the absolute value will vary due to the barometric pressure or temperature. As an example - in recent years the barometric pressure in Gothenburg, Sweden, which is at sea level, varied between a maximum of 1 052 hPa and a minimum of 950 hPa which corresponds to uncorrected oxygen readings between 21.78 % and 19.67 %. Although these are extreme values they point out the importance of having an accurate pressure value inside the tube.

Step 3: Purging with Nitrogen

Note

In the instruction it is assumed that totally oxygen free nitrogen is used. The concentration value of the SITRANS SL during this procedure will not be lower than the oxygen content in the nitrogen.

1. Attach your source of purging gas (N_2) to the needle valve on either the receiver or transmitter side.
2. Close the other needle valve.
3. Purge the verification tube until the concentration value falls below 0.05 Vol% O_2. The nitrogen pressure should not exceed 1 bar (100 kPa) overpressure compared to ambient pressure. The gas flow should be higher than 1 l/min and the pressure of the nitrogen between 2 and 5 bar absolute. The gas should be able to escape through the two capillaries on the receiver and transmitter.
4. Close the needle valve. Wait for 10 minutes. After this time the O_2 value should not have increased to more than 0.15 Vol %. If the O_2 value exceeds this limit refer to section (Problem handling: insufficient purging) at the end of this chapter for further proceedings.
5. Wait until there is no more overpressure left in the system.
6. Remove the needle valve completely on either the receiver and transmitter side. This is necessary to avoid any overpressure in the tube.
7. Fill the verification tube according to one of the two alternatives below.

Step 4a: Filling the verification tube with ambient air

1. Disconnect both the receiver and the transmitter from the verification tube. Verification must be performed within 10 minutes from this step to prevent air from entering into the volume behind the lenses.
2. Swing the verification tube a few times in the air to remove the purging gas from the tube and fill it with ambient air. Also swing the receiver and the transmitter a few times carefully.
3. Wait for about 60 seconds.
4. Reconnect the receiver and transmitter to the verification tube. Be careful not to allow any other gas than air to enter the tube, including breath.

Step 4b: Filling the verification tube with pressurized air

1. Disconnect the nitrogen source.
2. Attach your source of dry, oil free, pressurized air to the needle valve on either of the receiver or transmitter side and make sure the pressure at the inlet doesn't exceed an overpressure of 1 bar compared to ambient pressure.
3. Purge with a volume flow of at least 1 liter/minute. Verification must be performed within 10 minutes from this step to prevent ambient air from entering into the volume behind the lenses.
4. Purge until the concentration value stabilizes (concentration changes less than 0.1 vol %/ minute) and then turn off the gas.
5. Set the manual temperature value in the LUI to the temperature displayed by the thermometer.

Step 5: Verification

1. Watch or record the measured value for at least 20 seconds to ensure that it is stable (i. e. concentration varies not more than ±0.05 vol % / minute).
2. Take 5 successive concentration values and write them into the verification sheet.
3. If the difference between the highest and the lowest concentration value is more than the maximum repeatability value (see technical data (Page 203)), the measurements must be repeated.
4. Compare the average of the 5 values with the verification set point. If it lies within the range between the set point and the total verification uncertainty, the instrument works properly.If the average value lies outside this range, please contact Siemens support.
5. Put the removed needle valve back into place and close it.
   Repeat all steps of one of the paragraphs "Filling the verification tube with ambient air" or "Filling the verification tube with pressurized air" as described before.
6. If the difference between measured value and verification point is more than 0.4 vol % O_2 the verification procedure should be repeated from the start.

Step 6: Purging with nitrogen

To make sure that the instrument was purged well all the time during the verification procedure another purging procedure with nitrogen is necessary. To do so:

1. Attach your nitrogen source to the remaining needle valve once more.
2. Purge the verification tube for about 5 minutes until the concentration value falls well below 0.2 vol % O_2. Make sure the overpressure at the inlet does not exceed 1 bar compared to ambient pressure. The gas flow should exceed 1 l/min.
   If the O_2 concentration value does not fall below 0.2 vol % O_2 it is obvious that too much oxygen has entered the volume behind the lenses during verification. The verification procedure should be repeated from the start.
3. Close the needle valve. Wait for 10 minutes. After this time the O_2 concentration value should not have increased to more than 0.15 vol % O_2.
4. Note this value in the verification sheet.

Step 7: Restore

1. Restore path length, pressure correction and temperature correction to original settings according to the notes taken.
2. After restoring correction settings, press ← button repeatedly to exit the menu. Select OK when you are asked to save.
3. Reinstall the receiver and transmitter at the industrial interfaces.

Troubleshooting: Insufficient purging

If the oxygen concentration in the verification tube moves above 0.15 vol % after having been purged with nitrogen, this may be due to an elevated oxygen content inside the housing units. To remove that oxygen you can follow one of the two procedures below depending on your permission to open the lids of the housing. If you are not permitted to open the lids, you shall just keep on purging the verification tube with nitrogen until all oxygen in the housing is gone. This may take several hours or even a whole day. Thus the purging should be interrupted from time to time to test if the oxygen content has fallen below 0.15 vol %. If the test result is above 0.15 vol % within a 10 minutes time you must continue purging with nitrogen.

If you are permitted to open the lids, you should first open the lids such that the gas can easily enter the gap between lid and housing, but without risk of the lids falling off. Then turn on the nitrogen flow. After 15 minutes of nitrogen purging the housing should be free of oxygen. After purging first close the lids. Then turn off the nitrogen and wait for another 10 minutes. If the oxygen value remains below 0.15 vol %, the problem is solved. If not, repeat the procedure.

See also

Verification Sheets (Page 220)

Technical specifications (Page 203)

9.3.2 Verification with a verification cell

The verification cell is intended for the carbon monoxide version of the SITRANS SL (SITRANS SL CO).

The verification module is mounted between the transmitter tube unit (transmitter) and receiver tube unit (receiver) during verification. The verification kit consists of a metal tube and a gas filled glass cell with a defined gas concentration stated in the corresponding certificate.

9.3.2.1 Span verification

For the span verification of the instrument follow steps 1 through 3 below. This process should be documented using the form "Verification Sheet" in Appendix A.

Necessary equipment

- Verification kit
- Sensor connecting cable
  If your regular sensor connection cable cannot be removed from the installation, you need a supplementary one.

Step 1: Setup of verification tube

1. Start the procedure by removing the receiver and transmitter from the flanges. Depending on the prevailing safety conditions and what is more convenient, the power may be kept on and the sensor connection cable stay connected, or the power may be shut off and the sensor connection cable be disconnected.

NOTICE
Electric shock Never disconnect the sensor connection cable with the power switched on.

2. Mount the receiver and transmitter on the verification tube.
3. If the analyzer has been moved to a location with a different ambient temperature than that at the installation site, you need to wait until it has been adapted to the new temperature before proceeding from this step. In this way you avoid condensation problems and assure static and homogeneous temperature distribution in the verification tube.
4. If necessary, connect the sensor connection cable between the receiver and transmitter and power up the SITRANS SL.

Step 2: Preparations and LUI settings

In order to document the verification procedure you should fill out the 'SITRANS SL CO Verification sheet' form thoroughly during verification.

1. Make a copy of the "Verification sheet" form you can find in Annex A.
2. Fill out the first part (General Information).

3. Enter the password to access the Local User Interface (LUI) using the remote control.

Note

Remember to write down the original values before making any alterations to the settings!

4. Note the current integration time in the verification sheet. Set the integration time to 20 s.
5. Note the settings for the path length in the verification sheet. Set the path length to the value stated in the certificate. Notice that this is valid with the in-line reference cell in place. Note this value also in the verification sheet.
6. Note pressure source settings and, if applicable, pressure manual value in the verification sheet. Set the pressure source to "manual" and enter the value stated in the certificate. Note this value also in the verification sheet.
7. Note temperature source settings and, if applicable, temperature manual value in the verification sheet. Set the temperature source to "manual" and set the temperature manual value to the ambient temperature.
   Note this value also in the verification sheet.
8. Enter the appropriate values for the verification errors: Instrument error (according to the instrument specifications), and temperature error.
   The temperature error depends on your measurement. If the system and the purging gas used are well tempered, you can use the error of the thermometer itself: 1 °C.
9. Calculate the total uncertainty of the measurement by adding instrument error, and temperature error.

NOTICE
Temperature influence on the verification procedure It is very important to enter the accurate temperature values. As a rule of thumb you need the same accuracy of the temperature values you expect for your verification tolerance.

Step 3: Verification

1. Watch or record the measured value for at least 20 seconds to ensure that it is stable (i. e. concentration varies not more than ±1 vol % of the reading).
2. Take 5 successive concentration values and write them into the verification sheet.
3. If the difference between the highest and the lowest concentration value is more than 1 %, the measurements must be repeated.
4. Compare the average of the 5 values with the verification set point stated in the certificate. If it lies within the range between the set point and the total verification uncertainty, the instrument works properly.
   If the average value lies outside this range, repeat the verification procedure. If the test still fails, contact Siemens support providing the filled-out verification sheet with all verification results.

See also

Verification Sheets (Page 220)

9.3.3 Instrument verification for O2 high temperature applications

The SITRANS SL O_2 high temperature application is used to measure the O_2 concentration at high temperatures. Thus, obtained measurement values at ambient temperature don't accurately match to real or absolute O_2 concentration, but remain stable at identical measurement conditions. The verification measurement as stated in this section should be used to check any drift of the device but should not be used for calibration purposes.

Each device is delivered with a verification kit certificate which comprises the correction factors for temperature and pressure required for the verification of the instrument.

9.3.3.1 Verification with the verification tube

The verification tube is intended for measuring the oxygen content at ambient temperature.

Necessary equipment

- Verification kit
- Sensor connecting cable
  If your regular sensor connection cable cannot be removed from the installation, you need a supplementary one.
- Barometer
  to measure the atmospheric pressure
- Thermometer
  to measure the ambient temperature
- Optical attenuator
  to reduce the laser beam output (only required for option R03)

9.3.3.2 Span verification

For the span verification of the instrument follow steps 1 through 7 below. This process should be documented using the form "Verification Sheet" in Appendix A of the manual.

Step 1: Setup of verification tube

1. Shut off the power!

NOTICE
Electric shock Never disconnect the sensor connection cable with the power switched on.

2. Shut the purging gas valves.
3. Start the procedure by removing the receiver and transmitter from the flanges. Depending on the prevailing safety conditions and what is more convenient, the sensor connection cable may stay connected or be disconnected.

4. Insert the optical attenuator into the transmitter side of the verification tube (only required for option R03).
   Then mount the device on the tube. The purge inlet should be connected directly to the transmitter to avoid a setback of the attenuator when the purging valve is open.

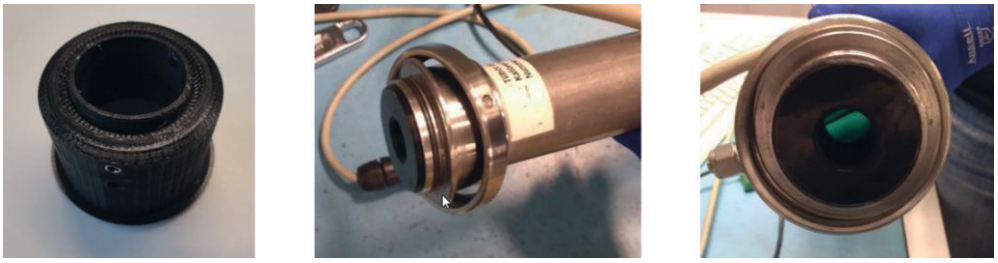

Figure 9-4 Optical attenuator

5. Mount the receiver and transmitter on the verification tube.
6. If the analyzer has been moved to a location with a different ambient temperature than that at the installation site, you need to wait until it has been adapted to the new temperature before proceeding from this step. In this way you avoid condensation problems and assure static and homogeneous temperature distribution in the verification tube.
7. If necessary, connect the sensor connection cable between the receiver and transmitter and power up the SITRANS SL.

Step 2: Preparations and LUI settings

In order to document the verification procedure you should fill out the 'Verification sheet' form thoroughly during verification.

1. Make a copy of the "SITRANS SL O2 Verification sheet" form you can find in Appendix A.
2. Fill out the first part (General Information).
3. Enter the password to access the Local User Interface (LUI).

Note

Remember to write down the original values before making alterations to the settings!

4. Note the current integration time in the verification sheet. Set the integration time to 20 s.
5. Note the settings for the path length in the verification sheet. Set the path length to 0.450 m which is the effective length in the verification tube. Notice that this is valid with the in-line reference cell in place.
6. Note pressure source settings and, if applicable, pressure manual value in the verification sheet. Set the pressure source to "manual" and enter the pressure value given in the verification kit certificate of the instrument. Note this value also in the verification sheet.
7. Note temperature source settings and, if applicable, temperature manual value in the verification sheet. Set the temperature source to "manual" and enter the temperature value given in the verification kit certificate of the instrument. Note this value also in the verification sheet.

Step 3: Purging with Nitrogen

Note

In the instruction it is assumed that totally oxygen free nitrogen is used. The concentration value of the SITRANS SL during this procedure will not be lower than the oxygen content in the nitrogen.

1. R02 option: Attach your source of purging gas (N_2) to the needle valve on either the receiver or the transmitter side.
   R03 option: Attach your source of purging gas (N_2) directly to the transmitter.
2. Close the other needle valve.
3. Purge until the concentration value stabilizes (concentration changes less than 0.3 vol %/ minute) and then turn off the gas.
4. Close the needle valve. Wait for 10 minutes. After this time the O_2 value should not have increased to more than 0.15 Vol%. If the O_2 value exceeds this limit refer to section (Problem handling: insufficient purging) at the end of this chapter for further proceedings.
5. Remove the needle valve completely on either the receiver or the transmitter side. This is necessary to avoid any overpressure in the tube.

Step 4: Filling the verification tube with pressurized air

1. Disconnect the nitrogen source.
2. R02 option: attach your source of dry, oil free, pressurized air to the needle valve on either of the receiver or transmitter side.
   R03 option: attach your source of dry, oil free, pressurized air directly to the transmitter.
3. Purge with a volume flow of approx. 4 liters/minute. Verification must be performed within 10 minutes from this step to prevent air from entering into the volume behind the lenses.
4. Purge until the concentration value stabilizes (concentration changes less than 0.3 vol %/ minute) and then turn off the gas.
5. Remove the needle valve completely on either the receiver or the transmitter side. Wait until the concentration value stabilizes (concentration changes less than 0.3 vol %/minute). This is necessary to avoid any overpressure in the tube.

Step 5: Verification

1. Watch or record the measured value for at least 20 seconds to ensure that it is stable (i. e. concentration varies not more than ±0.2 vol %/minute).
2. Take 5 successive concentration values and write them into the verification sheet.
3. If the difference between the highest and the lowest concentration value is more than the maximum repeatability value of 2 %, the measurements must be repeated.
4. Calculate the average of the 5 verification measurement values.

5. Multiply the averaged verification measured values with the temperature compensation and pressure compensation factors given in the verification kit certificate of the instrument. The following formula applies: Verification value = measured value x temperature compensation factor x pressure compensation factor.
6. Compare the verification value with the reference measured value given in the verification kit certificate. If the verification value exceeds the range of the reference measured value by more than ±1 % vol please contact the Siemens support.

Step 6: Purging with nitrogen

To make sure that the instrument was purged well all the time during the verification procedure another purging procedure with nitrogen is necessary. To do so:

1. R03 option: Attach your nitrogen source to the remaining needle valve once more.
   R02 option: Attach your nitrogen source directly to the transmitter.
2. Purge the verification tube for about 5 minutes until the concentration value falls well below 0.3 vol % O_2. The gas flow should be approx. 4 l/min.
   If the O_2 concentration value does not fall below 0.3 vol % O_2 it is obvious that too much oxygen has entered the volume behind the lenses during verification. The verification procedure should be repeated from the start.
3. Close the needle valve. Wait for 10 minutes. After this time the O_2 concentration value should not have increased to more than 0.15 vol % O_2.
4. Note this value in the verification sheet.

Step 7: Restore

1. Restore path length, pressure correction and temperature correction to original settings according to the notes taken.
2. After restoring correction settings, press ← button repeatedly to exit the menu. Select OK when you are asked to save.
3. Reinstall the receiver and transmitter at the industrial interfaces.

Troubleshooting: Insufficient purging

If the oxygen concentration in the verification tube moves above 0.15 vol % after having been purged with nitrogen, this may be due to an elevated oxygen content inside the housing units. To remove that oxygen you can follow one of the two procedures below depending on your permission to open the lids of the housing. If you are not permitted to open the lids, you shall just keep on purging the verification tube with nitrogen until all oxygen in the housing is gone. This may take several hours or even a whole day. Thus the purging should be interrupted from time to time to test if the oxygen content has fallen below 0.15 vol %. If the test result is above 0.15 vol % within a 10 minutes time you must continue purging with nitrogen.

If you are permitted to open the lids, you should first turn on the nitrogen flow. Then open the lids such that the gas can easily enter the gap between lid and housing, but without risk of the lids falling off. After 15 minutes of nitrogen purging the housing should be free of oxygen. After purging first close the lids. Then turn off the nitrogen and wait for 10 minutes. If the oxygen value remains below 0.15 vol %, the problem is solved. If not, repeat the procedure.

9.3.4 Verification of systems used in hazardous areas

Verification setup

Verifying the system requires that it is mounted to the verification module.

⚠ WARNING

- If the verification is to be carried out in the hazardous area be sure to confirm with the plant manager that it is safe to do so (hot work permit)!
- The thermometer is neither Ex nor FM certified. If the thermometer therefore must be removed, the hole where the thermometer was attached should be plugged and the temperature measured with some other device.

Note

The verification kit is not part of the standard delivery. If you carry out the calibration verification for your own, you have to order the verification kit additionally.

Procedure

1. The sensor and transmitter have to be dismounted from the measuring setup.
2. If necessary the cables in the receiver and the transmitter have to be disconnected. The units have then to be moved to an appropriate location for verification. The sensors must then be reconnected to each other using a sensor connection cable.
3. Verify the system as described in sections before.
4. Reinstall in reverse order.

9.4 Cleaning the optical parts of the sensor

If the transmission for a channel drops below the level set by the user, the transmission alarm will be activated. This means that the sensors for this channel need service (cleaning of the optical surfaces and aligning the sensors).

Before the sensors are removed make sure that:

- If there is steam purging – make sure ithat the steam source is turned off.

⚠ CAUTION

Severe burns

Overheated steam is invisible and can cause severe burn injuries. To prevent these injuries

- turn off the steam!

- No hazardous or hot gases can escape from the process.
- Appropriate protection against hot surfaces on and around the sensor is used.

Preparations

⚠ WARNING

Danger of burns

Due to hot process gases and/or purging media the optics housings and their environment can become very hot. This applies particularly when steam is used for purging since overheated steam is not visible!

Before you start cleaning the optical parts of the optics housing make sure that

- no purging is under way
- no hazardous or hot gases can escape from the process
- you are sufficiently protected against hot surfaces on and around the optics housing, e.g. by using protective gloves

Failure to do so may result in severe burns!

Cleaning the process interface window on the process side

1. Demount the process interface, also demount the purging tube if applicable.

   ⚠ WARNING

   Dangerous or pressurized process

   Before you start demounting the process interface make sure that the process conditions are safe, e.g. there are no more pressure or dangerous substances on the process side.

2. Remove all dust particles using pressurized air or flushing water.
3. Clean the optical surface with a soft cloth. Water with a small amount of soap or a mild detergent also works fine in many cases.
   Start the cleaning process at the center and work with circular movements towards the rim.
4. To remount the process interface, refer to section Mounting (Page 73). Also a new alignment of the optics housings has to be carried out.

Cleaning the lens or the process interface window on the optics housing side

1. Release the clamp ring using an appropriate tool.
2. Remove the optics housing.
3. Clean the optical surfaces from dust particles using pressurized air or flushing water.
4. Clean the optical surfaces with a soft cloth. Water with a small amount of soap or a mild detergent also works fine in many cases. Start the cleaning process at the center and work with circular movements towards the rim.
5. To remount the optics housing, screw on the lock ring and tighten it gently with the tool.

If this operation is performed properly, it will not affect the alignment of the optics housing.

Note

Any work with the optical lens requires utmost care. The lens is anti-reflection coated and thus very susceptible to scratches!

Alarm, error, and system messages

10

10.1 Alarm

Introduction

In this chapter the word 'alarm' is used as a general term without referring to the alarm level, i.e. if it is a failure, a warning or just informative. The actions to be taken when an alarm trigged are specific to each alarm.

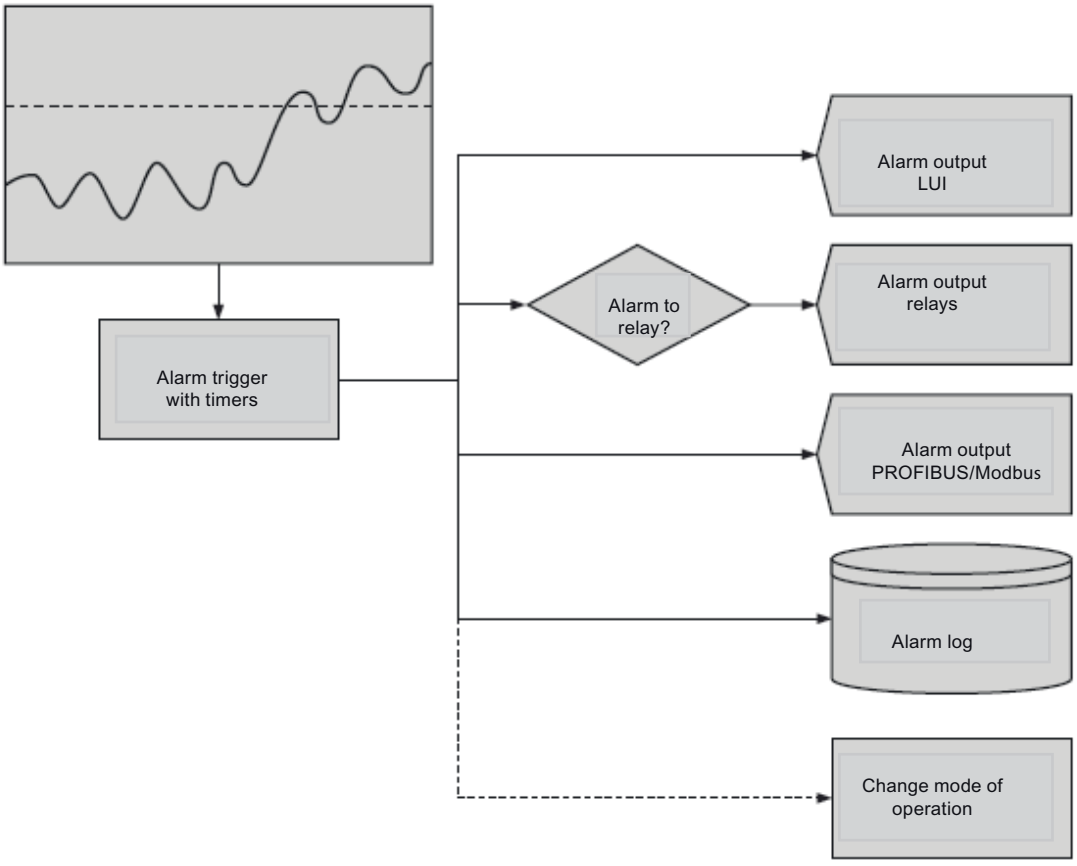

Figure 10-1 Alarm overview

Alarm Triggering

Generally a SITRANS SL alarm has three parameters:

- Triggering level
- Triggering time (T_{Set})
- Reset time (T_{Res})

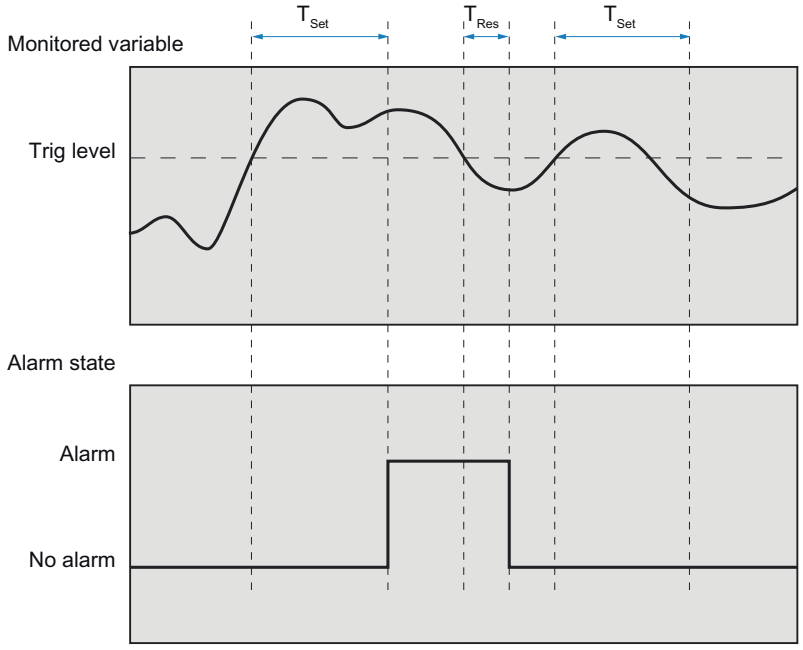

Figure 10-2 Alarm triggering

Alarms with different behaviors or configurations are handled later in this chapter under the alarm description.

Reporting the Alarm

Binary outputs

For each alarm it is possible to select if it should affect none, one or both of the relays. Configuration for both outputs can be edited using the LUI user interface.

Analog outputs

For each output, actions can be set up for the following cases:

- Maintenance Fault
- Maintenance Demanded
- Process Value Fault
- Process Value Warning
- Process Value Tolerance
- No Data Exchange
- Local Override

- Device Unlocked
- Configuration Warning

Possible actions:

- Off (present measured value)
- Latest (freeze on the last presented value)
- Default level (set to a predefined default level)
- 3mA (NAMUR NE43 failstate)

PROFIBUS and Modbus

PROFIBUS and Modbus have two ways of reporting a problem, quality indication and alarm.

Quality indication that comes with every cyclic data (measurements) and is either a value or one of the following states:

- Good
- Uncertain
- Bad

LUI

The lower half of the measurement view (i.e. the standard view) of the LUI is designated for the alarm display. Once an alarm has been triggered the alarm text is displayed together with an icon. The icon indicates type and level of the alarm.

If several alarms are simultaneously active, the most serious alarm is displayed. To indicate that there are more than one alarm active, the icons of for all active alarms appear alternately but the displayed text always refers to the most serious alarm. To scroll through the list of active alarms repeatedly press the ← key.

Start-up Failure

Relays are not activated until system has completed the start-up procedure, i.e. the alarms go inactive when the system works properly.

When being operated via PROFIBUS or Modbus, the PLC will notice that the SITRANS SL is missing on the bus if it does not start. In that case the PLC can generate an alarm.

States and Symbols

An alarm display on the LUI consists of a text and an icon to the left of the text. The icon indicates type and level of an alarm.

Icon	Description
	**Maintenance fault** The device is in immediate need for maintenance. Measurement values cannot be produced. Example: Transmission too low for measurement due to contamination or misalignment



Maintenance demanded
The device is in need for maintenance to assure continuous operation. Measurement values are produced but may be uncertain.

Example: Transmission is low due to contamination or misalignment



Maintenance required
N/A



Process value fault
Measurement values cannot be produced due to a problem with one or more process values.

Examples: Malfunction of an external sensor. A process value is outside the limits of the compensation files.



Process value warning
Measurement values are produced but may be uncertain due to a problem with one or several process values.

Example: A process value exceeds the specification of the device.



Process value tolerance
One or more process values have reached a tolerance limit.

Example: An external sensor reports an uncertain quality code.



Configuration fault
The device cannot operate due to invalid configuration of parameters or hardware.



Configuration warning
Device might work, but one or more parameters are invalid. Default values are used instead.



Configuration changed
N/A



Local override
Output values are not actual measurements.

Example: Test mode is active for an output.



Simulation or substituted value
N/A



Out of operation
N/A



Data exchange
Indicates irregular data communication
Example: The software is executing save settings.

No data exchange



Communication failure.
Example: PROFIBUS master has been switched of.



Write access on/off
Write access on is used to indicate that the Local User Interface is unlocked.

Alarm groups

The alarm groups are the base for alarm reporting on the conventional interface, i.e. relay outputs and failure signalling on analog outputs. The alarm groups are also used in the logbook.

LUI	Groups
G1	External sensor
G2	Receiver temperature
G3	Transmitter temperature
G4	Reference line
G5	Transmitter tube unit
G6	Service
G7	Transmission
G8	Receiver electronics
G9	Transmitter electronics
G10	Measurement out of range
G11	Configuration error
G12	Internal communication
G13	PROFIBUS client

The allocation of a specific alarm to its LUI alarm group is shown in table 10-1 "Alarm list (Page 191)".

Log book

In the log book there are some more groups

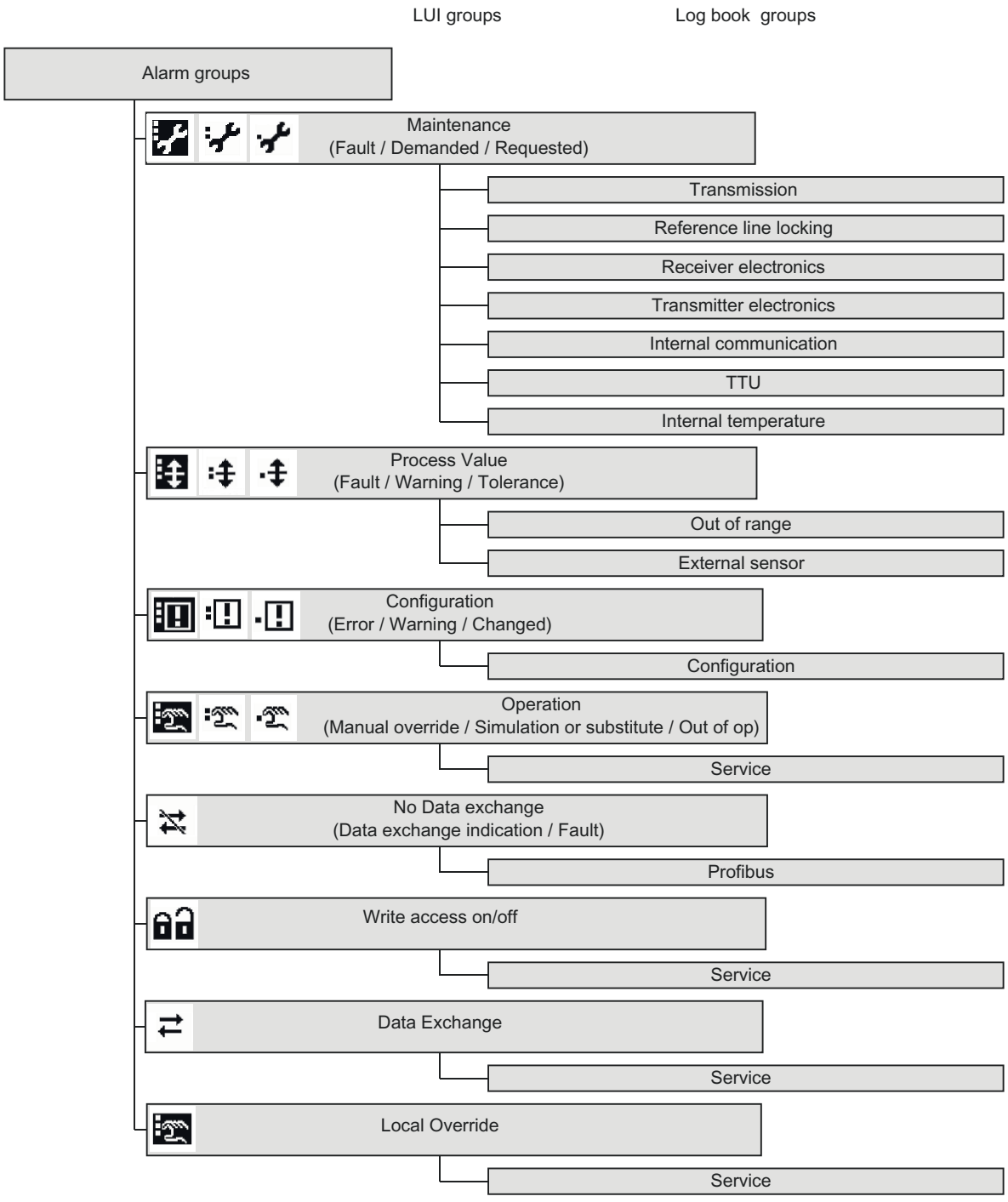

Figure 10-3 Log book groups

10.2 Alarm list

SITRANS SL can produce alarms from the following list.

Symbol/Group	Error Code	Alarm (description)	*Explanation*/Action
	E6	Startup procedure active	*The system is starting up. This alarm should disappear when system has started.* During normal ambient conditions the SITRANS SL should have started up within 5 minutes. Ensure that the ambient conditions are within the specifications for the SITRANS SL and restart the system if needed.
	E8	Line locking failure	*The SITRANS SL has failed to lock on to the built in reference cell.* Ensure that the ambient conditions are within the specifications for the SITRANS SL and restart the system. If the fault remains, contact Siemens support.
	E45	FPGA timeout receiver	*Internal communication failure in the Receiver.* Restart the system. If the fault remains, contact Siemens support.
	E46	FPGA timeout receiver junction	*Internal communication failure in the Receiver.* Restart the system. If the fault remains, contact Siemens support.
	E47	FPGA timeout transmitter	*Sensor connection cable communication failure.* Check that sensor connection cable is properly connected and not damaged.
	E48	Laser unpowered	*The SITRANS SL has stopped measuring to protect the laser from getting too hot.* The system may have been exposed to an ambient temperature higher than permitted. Check that the ambient temperature is within the specifications and ensure that the system is not exposed to direct sunlight. Restart the system.
	E66	Curve fit algorithm	*The curve fit algorithm fails due to laser drift.* Ensure that the ambient conditions are within the specifications for the SITRANS SL and restart the system. If the fault remains, contact Siemens support.
	E68	Line locking failure	*The line locking state machine ended up in a fault state.* Restart the system. If the fault remains, contact Siemens support.
	E73	Laser current limit	*A laser current above the permitted limit was detected. To prevent damage to the system the laser power was cut off.* Restart the system. If the fault remains, contact Siemens support.
	E76	No reference gas line	*The system was unable to detect the reference gas line.* Ensure that the ambient conditions are within the specifications for the SITRANS SL, then restart the system. If the fault remains or reappears, contact Siemens support.

Symbol/Group	Error Code	Alarm (description)	*Explanation*/Action
	E2	Low transmission	*The system has been in transmission pending mode for too long. In transmission pending mode the analyzer will only regulate the laser temperature from the calculated drift.* Ensure sufficient transmission by cleaning optical surfaces and re-alignment of the sensors.
	E3	Receiver power	*The power supply to the receiver is interrupted or not sufficient.* Check the cabling to the receiver.
	E4	Receiver junction power	*The power supply to the receiver is interrupted or not sufficient.* Check the cabling to the receiver.
	E5	Transmitter power	*The power supply to the transmitter is interrupted or not sufficient.* Check the cabling to the transmitter.
	E49	Transmitter board temperature	*Transmitter board temperature outside valid range.* Check that the ambient temperature is within the specifications and ensure that the system is not exposed to direct sunlight.
	E50	Receiver board temperature	*The receiver board temperature is outside the valid range.* Check that the ambient temperature is within the specifications and ensure that the system is not exposed to direct sunlight.
	E51	Laser board temperature	*The laser board temperature is outside the valid range.* Check that the ambient temperature is within the specifications and ensure that the system is not exposed to direct sunlight.
	E52	Detector board temperature	*The detector board temperature is outside the valid range.* Check that the ambient temperature is within the specifications and ensure that the system is not exposed to direct sunlight.
	E53	Receiver junction board temperature	*The receiver Junction board temperature is outside the valid range.* Check that the ambient temperature is within the specifications and ensure that the system is not exposed to direct sunlight.
	E54	Laser vibrator temperature	*The vibrator temperature is outside the valid range.* Check that the ambient temperature is within the specifications and ensure that the system is not exposed to direct sunlight.
	E62	Hardware Inconsistency	*Mismatch between receiver and transmitter versions e.g. when either the receiver or the transmitter has been replaced.* Contact Siemens support.
	E65	Laser drift	*The laser is getting close to the limit of operation.* Contact Siemens support.
	E77	Detector amplifier overrange	*The detector is saturated and the system is unable to compensate this situation.* If the alarm remains for several minutes or reappears regularly check that the ambient conditions are within the specifications and restart the system. If the alarm remains or reappears contact Siemens support.

Symbol/Group	Error Code	Alarm (description)	*Explanation*/Action
	E1	No transmission	*Transmission is too low.* The dust level in the optical path may be too high. If the fault remains at good visibility it may be necessary to clean the process windows and verify alignment.
	E12	Ext. temperature bad	*The state of the digital input indicates that the temperature value from the external sensor is bad.* Solve the problem caused by the external temperature sensor.
	E16	Ext. pressure bad	*The state of the digital input indicates that the pressure value from the external sensor is bad.* Solve the problem caused by the external sensor.
	E20	Ext. temperature source disconnected	*Configuration Error.* Contact Siemens support.
	E21	Ext. pressure source disconnected	*Configuration Error.* Contact Siemens support.
	E29	Compensation temp. file range	*The process temperature deviates from the operational range of this SITRANS SL application. The deviation is so large that no measurement value can be produced.* Delimit process temperature or verify that the temperature sensor produces correct measurements.
	E30	Compensation pressure file range	*The process pressure deviates from the operational range of this SITRANS SL application. The deviation is so large that no measurement value can be produced.* Delimit process pressure or verify that the pressure sensor produces correct measurements.
	E31	CurveFit temp. file range	*The process temperature deviates from the operational range of this SITRANS SL application. The deviation is so large that no measurement value can be produced.* Delimit process temperature or verify that the temperature sensor produces correct measurements.
	E32	CurveFit pressure file range	*The process pressure deviates from the operational range of this SITRANS SL application. The deviation is so large that no measurement value can be produced.* Delimit process pressure or verify that the pressure sensor produces correct measurements.
	E33	CurveFit gas file range	*Internal error when reading the curve fit compensation file.* Contact Siemens support.
	E59	Sensor temp. comp. file range	*The ambient temperature at the sensor is outside the specifications.* Check that the ambient temperature is within the specifications and ensure that the system is not exposed to direct sunlight.
	E63	A0 outside measurement range	*The current measurement value is outside the scaling range for the analog output signal.* Change the scaling of the analog output.
	E64	A1 outside measurement range	*The current measurement value is outside the scaling range for the analog output signal.* Change the scaling of the analog output.
	E69	Temp. input outside comp. table	*The temperature input is outside the range for which temperature compensation data is available for the analyzer.* This only happens if the temperature signal is far beyond

Symbol/Group	Error Code	Alarm (description)	*Explanation*/Action
			the process gas temperature range specified for the application. Check that the temperature input configuration is correct and the analyzer receives the correct value. If the fault remains within the temperature range specified for the application contact Siemens support. If the fault is triggered by temperature values outside the temperature range of the application contact Siemens sales to discuss possibilities to perform a measurement with your process conditions.
	E70	Pressure input outside comp. table	*The pressure input is outside the range for which pressure compensation data is available for the analyzer.* This only happens if the pressure signal is far beyond the process gas pressure range specified for the application. Check that the pressure input configuration is correct and the analyzer receives the correct value. If the fault remains within the pressure range specified for the application contact Siemens support. If the fault is triggered by pressure values outside the pressure range of the application contact Siemens sales to discuss possibilities to perform a measurement with your process conditions."

Symbol/Group	Error Code	Alarm (description)	*Explanation*/Action
	E10	Process temp. range	*The process temperature input is out of the range specified for the application.* Check the process temperature.
	E11	Process pressure range	*The process pressure is out of the range specified for the application.* Check the process pressure.
	E13	Ext. temperature low limited	*The analog input from the temperature sensor is out of range.* Check the connected temperature sensor.
	E14	Ext. temperature high limited	*The analog input from the temperature sensor is out of range.* Check the connected temperature sensor.
	E17	Ext. pressure low limited	*The analog input from the pressure sensor is out of range.* Check the connected pressure sensor.
	E18	Ext. pressure high limited	*The analog input from the pressure sensor is out of range.* Check the connected pressure sensor.
	E35	O_2 outside range	*Currently calculated gas concentration is outside the valid range for this application.* Check whether the measured gas concentration is reasonable. If so, contact Siemens support to evaluate if the measuring range can be increased. If the concentration seems incorrect it may be necessary to check path length, temperature correction and pressure correction.
	E41	CO outside range	*Currently calculated gas concentration is outside the valid range for this application.* Check whether the measured gas concentration is reasonable. If so, contact Siemens support to evaluate if the range can be increased. If the concentration seems incorrect it may be necessary to check path length, temperature correction and pressure correction.
	E67	Measurement quality	*The optical power is too low, or the input signal too noisy at the detector to guarantee an accurate measurement.* Clean the process windows and verify alignment. Also make sure that the process gas is not too turbulent or the purging rate too high.
	E15	Ext. temperature constant	*The external temperature source signal is frozen.* Check the connected temperature sensor.
	E19	Ext. Pressure constant	*The external pressure source signal is frozen.* Check the connected pressure sensor.
	E23	Ext. temperature uncertain	*The external temperature source signal is not reliable.* Check the connected temperature sensor.
	E24	Ext. pressure uncertain	*The external pressure source signal is not reliable.* Check the connected pressure sensor.
	E57	EEPROM configuration missing	*EEPROM configuration missing.* Contact Siemens support.
	E58	Save settings failed	*Save settings failed.* Contact Siemens support.

Symbol/Group	Error Code	Alarm (description)	*Explanation*/Action
	E09	Save settings active	Configuration changed
	E55	Analog output test mode	The test mode for analog outputs is active
	E56	Digital output test mode	The test mode for digital outputs is active
	E25	PROFIBUS configuration error	*PROFIBUS configuration fault.* Contact PLC support.
	E26	PROFIBUS connection error	*PROFIBUS Connection Error.* Check that PROFIBUS cables are properly connected.
	E27	PROFIBUS master switch off	*PROFIBUS Master Switch Off.* Contact PLC support. Check the PROFIBUS master switch.
	E28	PROFIBUS internal error	*PROFIBUS internal error.* Contact Siemens support.
	E61	LUI unlocked	*The LUI is unlocked and has no password protection.* Lock the LUI.
	E60	Watchdog reset triggered	*The analyzer has been reset due to a triggered watchdog event.* This alarm is automatically cleared at the screen after re-start of the system. The alarm will still be visible in the log-book.

Table 10-1 Alarm list sorted by Error Codes

Error Code	Alarm (description)	Alarm Application Status	LUI Group
E1	No transmission	Process value fault	G7
E2	Low transmission	Maintenance demanded	G7
E3	Receiver power	Maintenance demanded	G2
E4	Receiver junction power	Maintenance demanded	G2
E5	Transmitter power	Maintenance demanded	G5
E6	Startup procedure active	Maintenance fault	G4
E8	Line locking failure	Maintenance fault	G4
E9	Save settings active	Service	G6
E10	Process temp. range	Process value warning	G10
E11	Process pressure range	Process value warning	G11
E12	Ext. temperature bad	Process value fault	G1
E13	Ext. temperature low limited	Process value warning	G1
E14	Ext. temperature high limited	Process value warning	G1
E15	Ext. temperature constant	Process value tolerance	G1

Error Code	Alarm (description)	Alarm Application Status	LUI Group
E16	Ext. pressure bad	Process value fault	G1
E17	Ext. pressure low limited	Process value warning	G1
E18	Ext. pressure high limited	Process value warning	G1
E19	Ext. pressure constant	Process value tolerance	G1
E20	Ext. temperature source disconnected	Process value fault	G1
E21	Ext. pressure source disconnected	Process value fault	G1
E23	Ext. temperature uncertain	Process value tolerance	G1
E24	Ext. pressure uncertain	Process value tolerance	G1
E25	PROFIBUS configuration error	Data exchange / No data exchange	G13
E26	PROFIBUS connection error	Data exchange / No data exchange	G13
E27	PROFIBUS master switch off	Data exchange / No data exchange	G13
E28	PROFIBUS internal error	Data exchange / No data exchange	G13
E29	Compensation temp file range	Process value fault	G10
E30	Compensation prs file range	Process value fault	G10
E31	CurveFit temp. file range	Process value fault	G10
E32	CurveFit pressure file range	Process value fault	G10
E33	CurveFit gas file range	Process value fault	G10
E35	O_2 outside range	Process value warning	G10
E41	CO outside range	Process value warning	G10
E45	FPGA timeout receiver	Maintenance fault	G12
E46	FPGA timeout receiver junction	Maintenance fault	G12
E47	FPGA timeout transmitter	Maintenance fault	G12
E48	Laser unpowered	Maintenance fault	G5
E49	Transmitter board temperature	Maintenance demanded	G5
E50	Receiver board temperature	Maintenance demanded	G2
E51	Laser board temperature	Maintenance demanded	G5
E52	Detector board temperature	Maintenance demanded	G2
E53	Receiver junction board temperature	Maintenance demanded	G2
E54	Laser vibrator temperature	Maintenance demanded	G5
E55	Analog output test mode	Local override	G6
E56	Digital output test mode	Local override	G6
E57	EEPROM configuration missing	Configuration warning	G11
E58	Save settings failed	Configuration warning	G11
E59	Sensor temp. comp. file range	Process value fault	G10
E60	Watchdog reset triggered	Service	G6
E61	LUI unlocked	Data exchange / No data exchange	G6
E62	Hardware inconsistency	Maintenance demanded	G6
E63	A0 outside measurement range	Process value fault	G10
E64	A1 outside measurement range	Process value fault	G10
E65	Laser drift	Maintenance demanded	G5
E66	CurveFit algorithm	Maintenance fault	G5
E67	Measurement quality	Process value warning	G4

Error Code	Alarm (description)	Alarm Application Status	LUI Group
E68	Line locking failure	Maintenance fault	G4
E69	Temp. input outside comp. table	Process value fault	G10
E70	Pressure input outside comp. table	Process value fault	G10
E73	Laser current limit	Maintenance fault	G9
E76	No reference gas line	Maintenance fault	G4
E77	Detector amplifier overrange	Maintenance demanded	G8

10.3 PROFIBUS diagnosis and alarms

10.3.1 Diagnosis and alarm handling in PROFIBUS DP

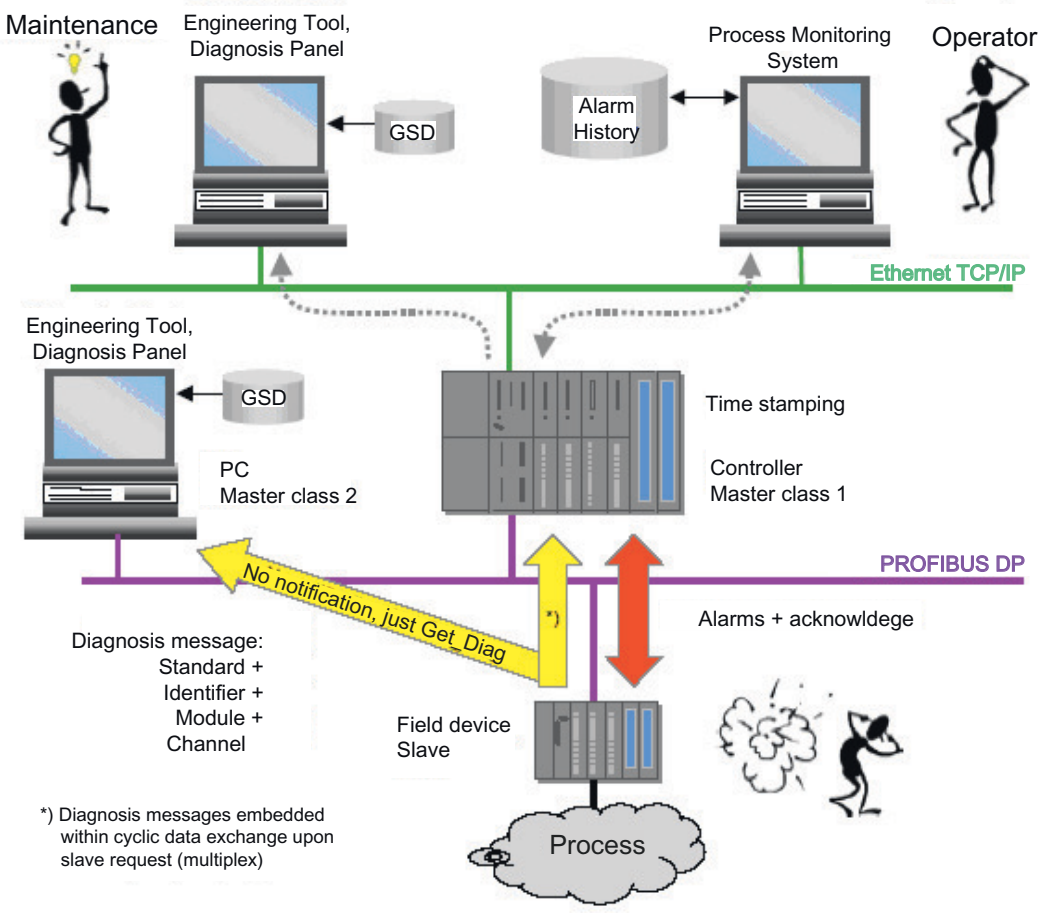

Figure 10-4 Diagnosis and alarm handling in PROFIBUS DP

10.3.2 Meaning of the diagnosis information

Standard PROFIBUS-DP mechanisms are used to transport diagnosis information and to signal actively to the class 1 master. The DIAGNOSIS parameter from the Physical Block is then available to the master as diagnostic information.

To view the diagnosis information from PROFIBUS, the module information of the DP slave is viewed and the respective text from the GSD file is displayed on the DP slave diagnostics screen.

The following table shows the assignment of the error signals and maintenance requests from the device to the diagnosis bits of the physical block in the GSD file and the related error code. The explanation and proposed remedial actions for each error code can be found in the Alarm list section.

Bit position	Error text message in GSD file	Error Code
Unit_Diag_Bit(16)	"Status appears"	-
Unit_Diag_Bit(17)	"Status disappears"	-
Unit_Diag_Bit(24)	"No transmission"	E1
Unit_Diag_Bit(25)	"Low transmission"	E2
Unit_Diag_Bit(26)	"Receiver power"	E3
Unit_Diag_Bit(27)	"Receiver junction power"	E4
Unit_Diag_Bit(28)	"Transmitter power"	E5
Unit_Diag_Bit(29)	"Startup procedure active"	E6
Unit_Diag_Bit(30)	"Shutdown procedure active"	-
Unit_Diag_Bit(31)	"Line locking failure"	E8
Unit_Diag_Bit(32)	"Save settings active"	E9
Unit_Diag_Bit(33)	"Process temp. range"	E10
Unit_Diag_Bit(34)	"Process pressure range "	E11
Unit_Diag_Bit(35)	"Ext. temperature bad"	E12
Unit_Diag_Bit(36)	"Ext. temperature low limited"	E13
Unit_Diag_Bit(37)	"Ext. temperature high limited"	E14
Unit_Diag_Bit(38)	"Ext. temperature constant"	E15
Unit_Diag_Bit(39)	"Ext. pressure bad"	E16
Unit_Diag_Bit(40)	"Ext. pressure low limited"	E17
Unit_Diag_Bit(41)	"Ext. pressure high limited"	E18
Unit_Diag_Bit(42)	"Ext. pressure constant"	E19
Unit_Diag_Bit(43)	"Ext. temp. source disconnected"	E20
Unit_Diag_Bit(44)	"Ext. prs. source disconnected"	E21
Unit_Diag_Bit(45)	"Laser current lower limit"	-
Unit_Diag_Bit(46)	"Ext. temperature uncertain"	E23
Unit_Diag_Bit(47)	"Ext. pressure uncertain"	E24
Unit_Diag_Bit(48)	"PROFIBUS configuration error"	E25
Unit_Diag_Bit(49)	"PROFIBUS connection error"	E26
Unit_Diag_Bit(50)	"PROFIBUS master switch off"	E27
Unit_Diag_Bit(51)	"PROFIBUS internal error "	E28
Unit_Diag_Bit(52)	"Temp. comp. file range"	E29

Bit position	Error text message in GSD file	Error Code
Unit_Diag_Bit(53)	"Prs. comp. file range"	E30
Unit_Diag_Bit(54)	"CurveFit temp. file range"	E31
Unit_Diag_Bit(55)	"CurveFit prs. file range"	E32
Unit_Diag_Bit(56)	"CurveFit gas file range"	E33
Unit_Diag_Bit(57)	"NH_3 outside range"	E34
Unit_Diag_Bit(58)	"O_2 outside range"	E35
Unit_Diag_Bit(59)	"H_2O outside range"	E36
Unit_Diag_Bit(60)	"HF outside range"	E37
Unit_Diag_Bit(61)	"H_2S outside range"	E38
Unit_Diag_Bit(62)	"HCl outside range"	E39
Unit_Diag_Bit(63)	"HCN outside range"	E40
Unit_Diag_Bit(64)	"CO outside range"	E41
Unit_Diag_Bit(65)	"CO_2 outside range"	E42
Unit_Diag_Bit(66)	"Temperature outside range"	E43
Unit_Diag_Bit(67)	"CH_4 outside range"	E44
Unit_Diag_Bit(68)	"FPGA timeout receiver"	E45
Unit_Diag_Bit(69)	"FPGA timeout receiver junction"	E46
Unit_Diag_Bit(70)	"FPGA timeout transmitter"	E47
Unit_Diag_Bit(71)	"Laser unpowered "	E48
Unit_Diag_Bit(72)	"Transmitter board temperature"	E49
Unit_Diag_Bit(73)	"Receiver board temperature"	E50
Unit_Diag_Bit(74)	"Laser board temperature"	E51
Unit_Diag_Bit(75)	"Detector board temperature"	E52
Unit_Diag_Bit(76)	"Receiver junction board temp."	E53
Unit_Diag_Bit(77)	"Laser vibrator temperature"	E54
Unit_Diag_Bit(78)	"Analog output test mode"	E55
Unit_Diag_Bit(79)	"Digital output test mode"	E56
Unit_Diag_Bit(80)	"EEPROM configuration missing"	E57
Unit_Diag_Bit(81)	"Save settings failed"	E58
Unit_Diag_Bit(82)	"Sensor temp. comp. file range"	E59
Unit_Diag_Bit(83)	"Watchdog reset triggered"	E60
Unit_Diag_Bit(84)	"LUI unlocked"	E61
Unit_Diag_Bit(85)	"Hardware inconsistency"	E62
Unit_Diag_Bit(86)	"A0 outside measurement range"	E63
Unit_Diag_Bit(87)	"A1 outside measurement range"	E64
Unit_Diag_Bit(88)	"Laser drift"	E65
Unit_Diag_Bit(89)	"Algorithm error"	E66
Unit_Diag_Bit(90)	"Measurement quality"	E67
Unit_Diag_Bit(91)	"Line locking failure"	E68
Unit_Diag_Bit(92)	"Temp. input comp. file range"	E69
Unit_Diag_Bit(93)	"Pressure input comp. file range"	E70
Unit_Diag_Bit(94)	"Reference fault"	E71
Unit_Diag_Bit(95)	"Reference warning"	E72

Bit position	Error text message in GSD file	Error Code
Unit_Diag_Bit(96)	"Laser current limit"	E73
Unit_Diag_Bit(97)	"Conc. conc. comp. file range"	E74
Unit_Diag_Bit(98)	"G init conc. comp. file range"	E75
Unit_Diag_Bit(99)	"No reference line"	E76
Unit_Diag_Bit(100)	"Detector amplifier overrange"	E77

Technical specifications

11

General information

General information	
Design	Transmitter and detector units, connected by a sensor cable
Materials	• Sensor enclosure: Treated aluminum/ stainless steel (1.4305/303) • Process interface: Acid-resistant stainless steel (1.4404/316L) • Window: hardened borosilicate glass • Compressible gaskets: FKM, FF, EPDM (holder for reference cell) • Flat gaskets: Graphite
Parts wetted by the process gases	• Purging tubes, flanges, window ring, process purging: acid-resistant stainless steel • Window: Borosilicate • Gasket in window: FFKM • Flat gasket between customer flange and process flange: Graphite
Installation	In-situ or bypass
Concentration units	• ppm • vol % • mg/Nm^3
Display	Digital concentration display (4 digits with floating decimal point)
Laser protection class	Class 1, safe to the eye

General information	
Explosion protection	Optionally, according to • ATEX: UL 23 ATEX 3032X Rev. 0 ⟨Ex⟩ II 2 G Ex db eb op is IIC T6 Gb ⟨Ex⟩ II 2 D Ex tb IIIC T85 °C Db • IECEx: IECEx UL 23.0044X ⟨Ex⟩ Ex db eb op is IIC T6 Gb ⟨Ex⟩ Ex tb IIIC T85 °C Db • FM17US0050X XP Class I, Division 1, Groups A, B, C, D, T6, Ta = 55°C DIP Class II/III, Division 1, Groups E, F, G T6, Ta = 55°C Class I, Zone 1, AEx db IIC T6 Gb, Ta = 55°C Class II, Zone 21, AEx tb IIIC T85 °C Db, Ta = 55°C indoors and outdoors (Type 4X, IP65) • CSA-C22.2: FM17CA0028X XP Class I, Division 1, Groups C, D T6 Ta = 55 °C; DIP Class II/III, Division 1, Groups E, F, G T6 Ta = 55 °C; Class I, Zone 1, Ex db IIC T6 Gb Ta = 55 °C; Zone 21, Ex tb IIIC T85 °C Db Ta = 55 °C indoors and outdoors (Type 4X, IP65)
Explosion protection for the remote control	ATEX/IECEx II 1G Ex ia op is IIC Ga ATEX/IECEx II 1D Ex ia op is IIIC T135°C Da SIRA 01ATEX2147; CSAE 21; IECEx SIR 09.0073 FM, CSA: IS, Class I, Division 1, Groups A, B, C, D, T6, Ta = 50°C IS, Class II/III, Division 1, Groups E, F, G, T6, Ta = 50°C

Design, enclosure

Design, enclosure	
Degree of protection	IP65 in accordance with EN 60529
Dimensions	For each unit (transmitter, receiver) • Diameter: 165 mm • Length 357 mm
Purging tube	• Length: 340 mm • Outer diameter: Ø 48 mm • Inner diameter: Ø 44 mm

Design, enclosure	
Weight	
• Receiver unit	6.0 kg
• Transmitter unit	5.2 kg
• Process interface	
– For DN 50/PN 10-40	5.3 kg
– For ANSI 4"/150 lbs.	approx. 12 kg
Connection dimension customer flange	• DN 50/PN 25 • DN 50/PN 40 or • ANSI 4"/150 lbs

Analytical performance

Analytical performance	
Measuring range	Internally adjustable
Detection limit at standardized conditions: • 25 °C gas temperature • 1000 hPa • 1 m effective optical path length • 3 s integration time and • constant ambient conditions	O_2: 200 ppm
Minimum measuring range (at an effective optical path length of 1 m)	O_2: 0 ... 1 vol. %
Maximum measuring range (measuring range * path length)	O_2: 0 ... 75 vol. % * m
Linearity (under standard conditions)	Better than 1%
Repeatability (under standard conditions)	O_2: 1% of the measuring range

Electrical characteristics

Electrical characteristics	
Power supply	24 V DC nominal (19 ... 30.2 V DC)
Maximum power consumption	10 VA
EMC immunity	In accordance with EN 61326-1
Electric safety	In accordance with EN 61010-1
Fuse specifications	T1.6L250V

Dynamic performance

Dynamic performance	
Warm-up time at 20 °C/68 °F ambient temperature	• Start of measurement: < 5 min. • Full gas measurement accuracy: < 60 min.
Response time (T_{90})	Approx. 2 s, depending on application
Integration time	0 ... 100 s, selectable

Influencing variables

Influencing variables	
Variations in ambient temperature	< 0.5 % of measuring range/10 K
Process gas temperature	With compensation: < 1 % of measuring range /100 K
Variations in ambient pressure	Negligible
Process gas pressure	O2: With compensation: < 1 % of measured value/4000 hPa
Variations in supply voltage	Negligible

Electrical inputs and outputs

Electrical inputs and outputs	
Number of measurement channels	1
Analog outputs	2 outputs, 4 ... 20 mA DC, floating, ohmic resistance max. 660 Ω. **Note** External isolating power supplies may have to be provided by the customer
Analog inputs	2 inputs, designed for 4 ... 20 mA, 120 Ω
Digital outputs	2 outputs, with switchover contacts, configurable, 24 V/0.5 A, floating, single pole double throw (SPDT)
Digital input	1 input, designed for 24 V, floating, configurable
Service port	Ethernet 10BaseT (RJ-45)
RS 485- PROFIBUS-DPV0	Two-wire interface, up to 3 Mbps, -7 ... + 12 V
RS 485-Modbus	Two-wire interface, up to 115 200 bit/s, -7 ... + 12 V

Connection cable to customer interface

Connection cable to customer interface	
Generally	Not included in standard delivery, permanently installed for SITRANS SL variant for IECEx based standards or optional for standard
Analog connection cable • SITRANS SL variant for IECEx based standards	10 x 2, with shielding in twisted-pair configuration (depending on type and number of I/Os used) Use only cables supplied
PROFIBUS DP connection cable • SITRANS SL variant for IECEx based standards	1 x 2 + 4 (PROFIBUS DP hybrid cable) Use only cables supplied

Connection cable to customer interface	
Modbus connection cable	1 x 2 + 3, with shielding in twisted-pair configuration
• SITRANS SL variant for IECEx based standards	Use only cables supplied
Cable length for SITRANS SL variant for IECEx based standards	3 m
Conductor cross-section	Min. 0.34 mm^2 (22 AWG)
Cable diameter	8 ... 12 mm or 13 ... 18 mm
Minimum bending radius SITRANS SL variant for IECEx based standards - PROFIBUS	110 mm
RS 485-Modbus	Two-wire interface, up to 115 200 bit/s, -7 ... + 12 V

Sensor cable

Sensor cable	
Generally	Not included in standard delivery, permanently installed for SITRANS SL variant for IECEx based standards or optional for standard
Sensor connection cable type	4 x 2, with shielding, in twisted-pair configuration
Conductor cross-section	Min. 0.34 mm^2 (22 AWG)
Cable sheath	PUR (polyurethane)
Dimensions	• Diameter 11 mm • Length: up to 25 m
Minimum bending radius	SITRANS SL variant for IECEx based standards: 85 mm

Climatic conditions

Climatic conditions	
Ambient temperature range	**Note:** The display on the receiver side must not be exposed to direct solar radiation.
• during operation	-20 ... +55 °C (-4 ... 131 °F) (additional solar radiation not permissible!)
• during transport and storage	-40 ... + 70 °C (-40 ... 158 °F)
Temperature range at the sensor side of the process interface (connection plate)	-20 ... +70 °C (-4 ... 158 °F)
Ambient pressure	800 ... 1 100 hPa (for SITRANS SL variant for IECEx based standards and FM/CSA versions)
Humidity	< 100 % relative humidity (non condensing)

Measuring conditions

Measuring conditions	
Measurement path	0.3 ... 8 m (other lengths: please contact Siemens)
Process gas pressure, temperature	• O_2: 900 ... 1100 hPa (absolute), 0 ... 600 °C (32 ... 1111 °F) • O_2: 700 ... 5 000 hPa (absolute), 0 ... 200 °C (32 ... 392 °F)
Dust load	The influence of a high dust load is complex and depends on the optical path length and particle size distribution.

Purging

Purging	
Purging gas	Nitrogen for O_2 applications
● Quality	O_2 applications: Purity better than 99.7 % in order to achieve full performance. For oxygen measurements, an oxygen content < 0.01 vol % in the purging gas is recommended.
● Dew point	< -10 °C (14 °F), condensation on the optics must be avoided
Sensor purging	
• Max. overpressure in the sensor	500 hPa
• Max. overpressure at sensor purging inlet	1 bar (100 kPa) above ambient pressure
• Purging gas temperature on sensor side	0 ... +55 °C (32 ... 131 °F)
• Flow	O_2 application:
– After commissioning of a sensor enclosure previously filled with air:	min. 1 l/min (for at least 15 minutes)
– thereafter	min. 0.25 l/minute
Purging on process side (optional)	
• Pressure at purging gas inlet	2000 ... 8000 hPa
• Flow	up to 50 l/minute, depending on process gas pressure, process gas speed, dust load, humidity etc.

Dimension drawings

12

SITRANS SL can be delivered with two different process flanges - suitable for flange connections DIN (DN50/PN10-40) or ANSI (ANSI 4"/150lb).

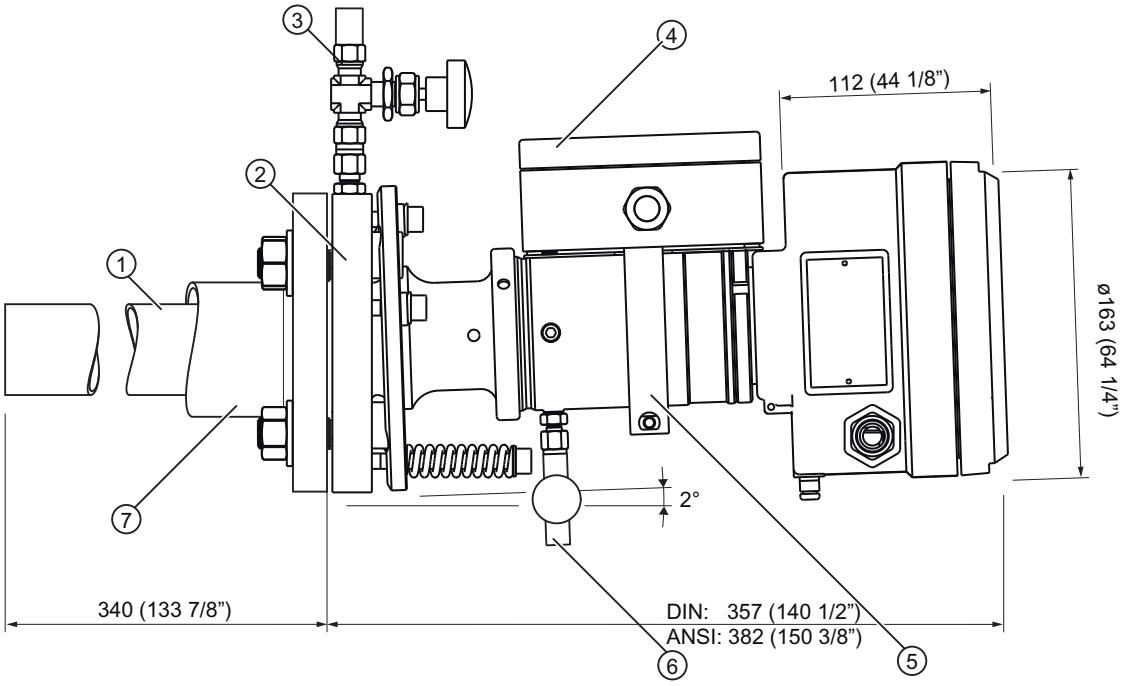

① Purging tube
② Process interface
③ Process purging input
④ Receiver cable kit or transmitter cable junction box
⑤ Mounting bracket for Receiver cable kit or transmitter cable junction box
⑥ Sensor purging input
⑦ Process flange

Figure 12-1 Dimensional drawing SITRANS SL (receiver and transmitter), all measures in mm (inches)

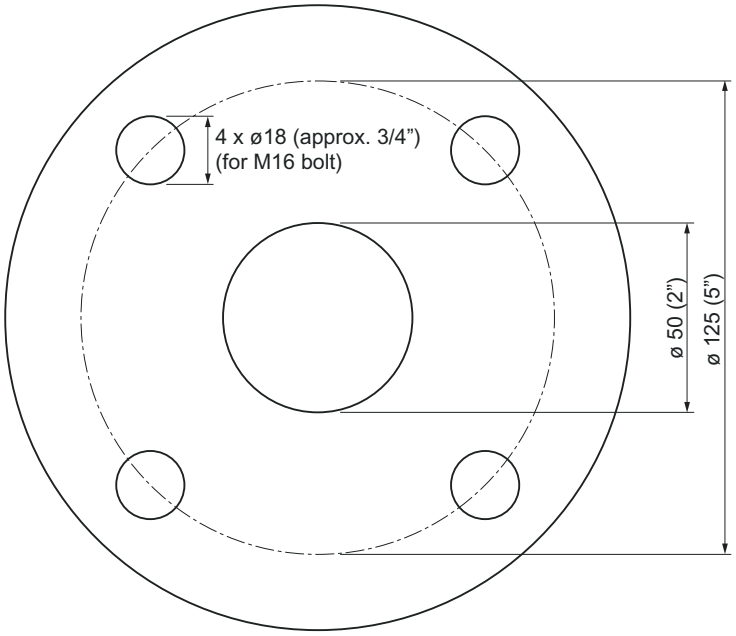

Figure 12-2 Dimensional drawing customer flange DN50/PN10-40, all measures in mm (inches)

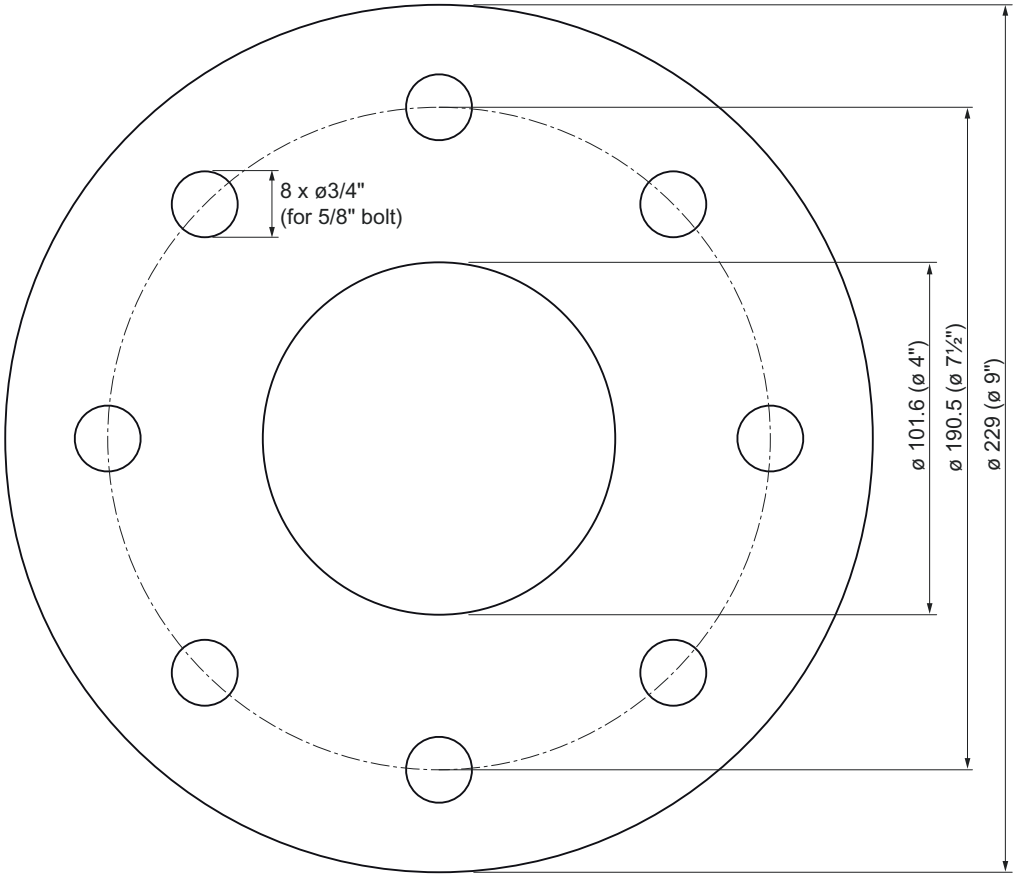

Figure 12-3 Dimensional drawing customer flange ANSI 4"/150 lb, all measures in mm (inches)

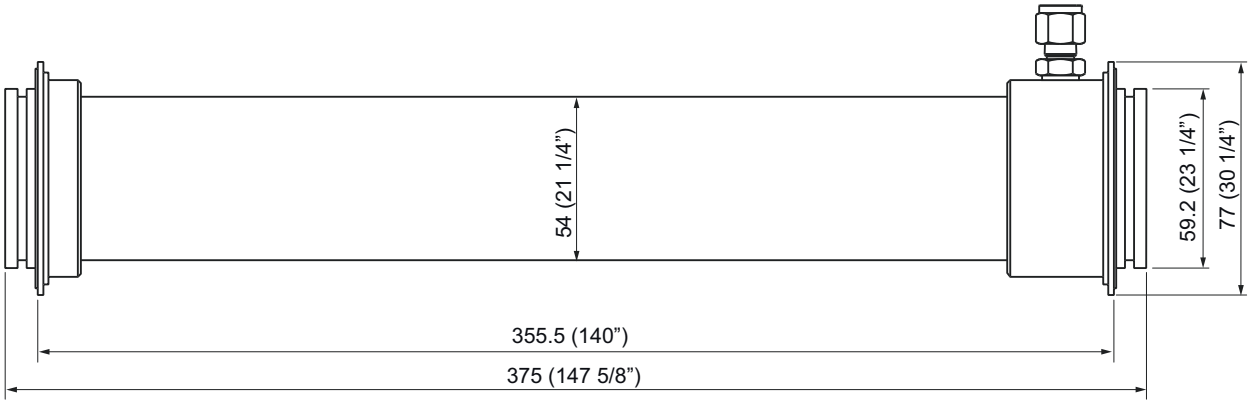

Figure 12-4 Dimensional drawing verification tube, all measures in mm (inches)

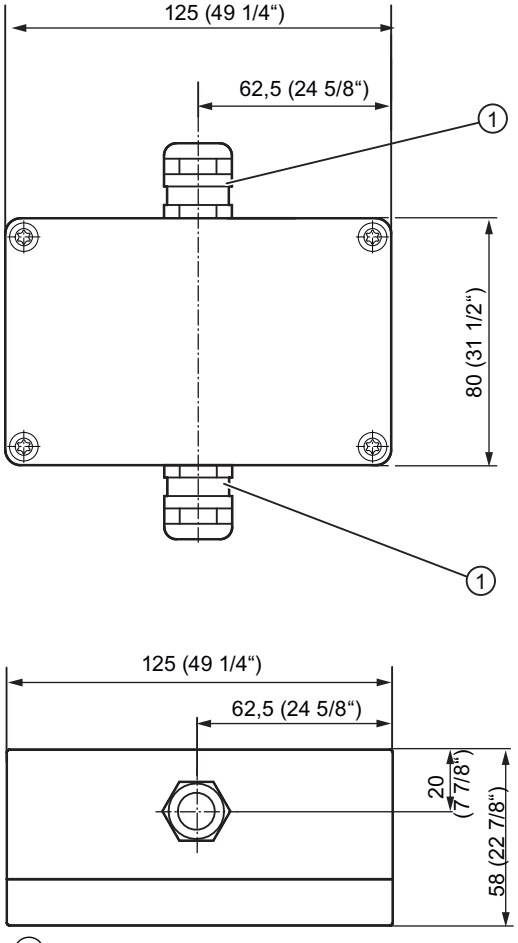

① Cable gland for sensor connection cable, M20 with plug

Figure 12-5 Dimensional drawing transmitter junction box, all measures in mm (inches)

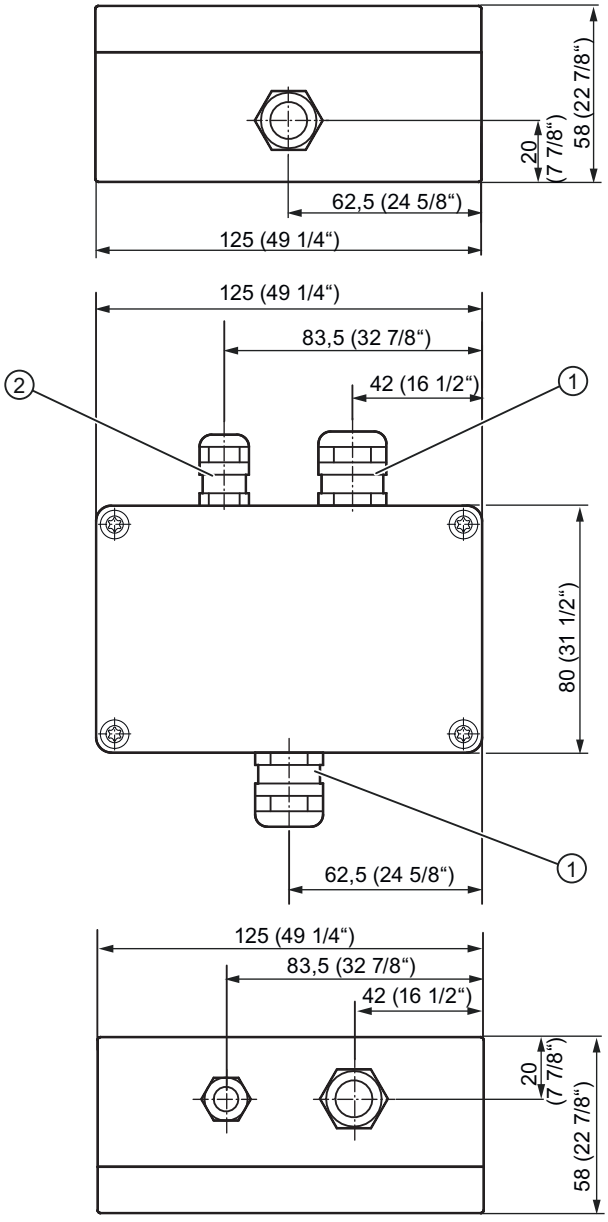

① Cable gland for sensor connection cable, M20 with plug

② Cable gland for Ethernet cable, M16 with plug

Figure 12-6 Dimensional drawing receiver junction box, all measures in mm (inches)

Decommissioning, dismantling, and disposal 13

13.1 Safety instructions

⚠ WARNING

Incorrect disassembly

The following dangers may result through incorrect disassembly:

- Injury through electric shock

- Danger through emerging media when connected to the process

- Danger of explosion in hazardous area

Observe the following for correct disassembly:

- Before starting work, ensure that the power supply and pressure supply are disconnected and hot device surfaces have cooled off.
- If the device contains dangerous process media, empty the device prior to disassembly. Make sure that no media are released which are environmentally hazardous.
- Secure the remaining connections so that no damage can result if the process is started unintentionally.

⚠ WARNING

Danger from purging lines under pressure

Danger of injury during maintenance or decommissioning

Hot gases or steam can be released when the purging lines are opened. Prevent media from exiting prior to opening or removing the device.

- Do not loosen process connections and do not remove any pressurized parts while the device is under pressure.
- Depressurize the device. Shut off the purging inlets and outlets. Disconnect the purging lines from the device.
- Before opening or removing the device, ensure that process media cannot be released.

⚠ CAUTION

Hazardous voltage at open device

Risk of electric shock when the enclosure is opened or enclosure parts are removed.

- Before you open the enclosure or remove enclosure parts, de-energize the device.
- If maintenance measures in an energized state are necessary, observe the particular precautionary measures. Have maintenance work carried out by qualified personnel.

Note

Special disposal required

The device includes components that require special disposal.

- Dispose of the device properly and environmental-friendly through a local waste disposal contractor.



Devices identified by this symbol may not be disposed of in the municipal waste disposal services under observance of Directive 2002/96/EC and / or Directive 2006/66/EC.

Waste electronic and electrical equipment and waste industrial batteries can be returned to the supplier within the EU or to a locally approved disposal service. Observe the specific regulations valid in your country.

13.2 Decommissioning the device

1. Ensure that gas is no longer flowing through the device.
   Ensure that no hazardous gases escape when removing the device.
2. If external pumps are present, switch all of them off.
3. Purge the sample gas path with air.
4. Isolate the device from power. Disconnect the connection to the power supply.
5. Ensure that the device cannot be started up again unintentionally.

13.3 Dismantling the device

Requirement

The device is decommissioned.

Procedure

1. Disconnect all connections between the device, the junction boxes and sensors.
2. Remove all connections.

All parts of the device and are now ready for disposal.

13.4 Disposing of the device

All parts in contact with process media have to be fully emptied before the disposal. When disposing of the device observe the statutory regulations applying in the respective country of use (for example guidelines on the disposal of electronic waste).

Have all parts of the device fetched by a certified waste disposal company and disposed of in accordance with the national regulations of the country of use.

13.5 Information on recycling

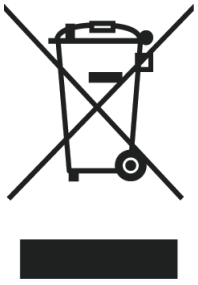

This product is from a environmentally-friendly manufacturer and complies with the directive 2012/19/EU on Waste Electrical and Electronic Equipment (WEEE).

This product may contain substances that are potentially harmful to the environment if disposed of improperly (landfills, incineration plants). It must therefore not be disposed of in this way.

Therefore, please be environmentally conscious:

- Ensure that this product is recycled at the end of its life cycle through the relevant local facilities!
- Observe the relevant regulations in your country.

To return a product to Siemens, see Returns to Siemens (www.siemens.com/returns-to-siemens).

Contact your Siemens representative to clarify if a product is repairable, and how to return it. They can also help with quick repair processing, a repair cost estimate, or a repair report/ cause of failure report.

NOTICE
Decontamination The product may have to be decontaminated before it is returned. Your Siemens contact person will let you know for which products this is required.

The remote control is powered by a lithium battery. If you intend to return this unit please observe the following:

Note

Return of products with lithium batteries

Lithium batteries are dangerous goods according to the Regulation of Dangerous Goods, UN 3090 and UN 3091.

- Remove lithium batteries prior to shipment.
- If the battery cannot be removed, return the product according to the Regulation of Dangerous Goods with special transport documentation.

13.6 Technical support

Technical support

If this documentation does not completely answer your technical questions, you can enter a Support Request (http://www.siemens.com/automation/support-request).

For help creating a support request, view this video here (www.siemens.com/opensr).

Additional information on our technical support can be found at Technical Support (http://www.siemens.com/automation/csi/service).

Service & support on the Internet

In addition to our technical support, Siemens offers comprehensive online services at service & support (http://www.siemens.com/automation/serviceandsupport).

Contact

If you have further questions about the device, contact your local Siemens representative, by doing the following:

1. Visit Contact at Siemens (http://www.automation.siemens.com/partner).
2. Select "All Products and Branches" > "Products & Services" > "Industrial automation".
3. Choose either "Process analytics" or "Process instrumentation", depending on your product.
4. Select the product category ("Pressure measurement", for example), then select your product.
5. Click "Search".
   The contacts for your product in all regions display.

Contact address for business unit:
Siemens AG
Digital Industries
Process Automation
Östliche Rheinbrückenstr. 50
76187 Karlsruhe, Germany

Appendix

A

A.1 Gas flow calculations

Gas flow calculations are slightly complex because gases are compressible fluids whose density changes with pressure. In this application we are dealing with choked flow. The outlet pressure is less than one half of the inlet pressure and the gas reaches sonic velocity in the valve. A further decrease in outlet pressure does not increase the flow.

The flow (q) of instrument air at P_1 = 6000 hPa and T_1 = 25 °C (77°F) through the needle valve when it is fully opened would then be a little more than 110 Nltr/min.

The figure below shows the flow (q) as a function of the up-stream pressure (P_1). There are two parameters in the diagram, the process pressure (P_p) and the temperature of the purge gas which is assumed to be air. The diagram shows the flow through a system with a total C_v of 0.1. The flow increases linearly with C_v.

q = the flow rate on the low pressure side [Nl/min.]
C_v= the flow coefficient (0.1 for the needle valve in our standard optics housing)
P_1 = the inlet absolute pressure [hPa]
G_g = the gas specific gravity (air = 1.0)
T_1 = the upstream temperature [°C]
P_p = process pressure [hPa]

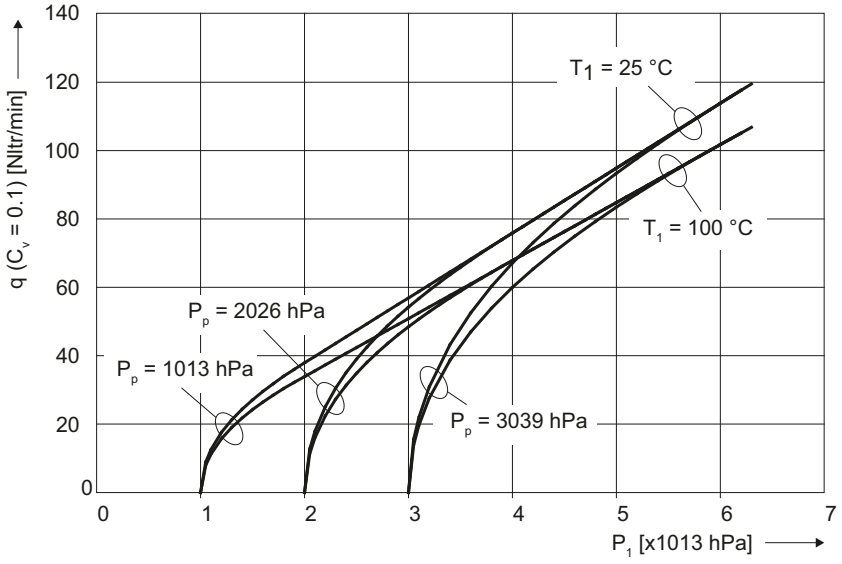

Figure A-1 Purge air flow rate

Note

This figure represents a general context between pressure and flow rate.
The maximum purge flow rate of the SITRANS SL on process side is limited to 50 Nl/min.

A.2 Classification according to Pressure Equipment Directive (2014/68/EU)

For gases of fluid group 1 and liquids of fluid group 1 the SITRANS SL gas analyzer complies with the requirements of the Pressure Equipment Directive 2014/68/EU, article 3, paragraph 3 (sound engineering practice).

A.3 ESD (ElectroStatic Discharge)

ESD is the rapid, spontaneous transfer of electrostatic charge induced by a high electrostatic field. Electrostatic damage to electronic devices can occur at any point from manufacture to field service. Damage results from handling the devices in uncontrolled surroundings or when poor ESD control practices are used. Generally damage is classified as either a catastrophic failure or a latent defect.

Note

Usually, the charge flows through a spark between two objects at different electrostatic potentials as they approach one another.



The symbol to the left indicates an ESD protected area, where all workspaces are ESD protected and all personnel must wear wrist straps. This symbol will be used in this chapter to indicate that a service task requires ESD protection.

A catastrophic failure means that exposure to an ESD event has caused an electronic device to stop functioning. Such failures usually can be detected when the device is tested before shipment.

A latent defect, on the other hand, is more difficult to identify. It means that the device has only been partially degraded from exposure to an ESD event. Latent defects are extremely difficult to prove or detect using current technology, especially after the device is assembled into a finished product.

Electrostatic charging

Anyone who is not connected to the electric potential of their surroundings can be electrostatically charged.

The following figure shows the maximum electrostatic voltage which may build up on a person coming into contact with the materials indicated. These values correspond to IEC 801-2 specifications.

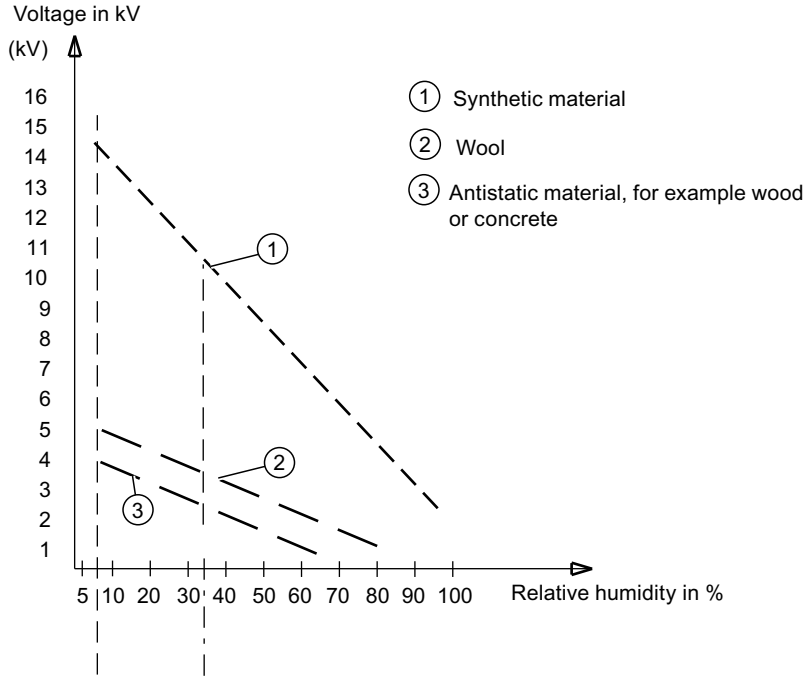

Figure A-2 Electrostatic voltages that can be charged to an operator

It is of utmost importance that ESD protective procedures are used during service in the field. The components used in the laser analyzer have all been protected from ESD through the whole production chain.

Ground Everything

Effective ESD grounds are of critical importance in any operation, and ESD grounding should be clearly defined and regularly evaluated. According to the ESD Association Standard ANSI EOS/ESD all conductors in the environment, including personnel, must be bonded or electrically connected and attached to a known ground, bringing all ESD protective materials and personnel to the same electric potential. This potential can be above a "zero" voltage ground reference as long as all items in the system are at the same potential. It is important to note that non-conductors in an Electrostatic Protected Area (EPA) cannot lose their electrostatic charge by attachment to ground.

Wrist Straps

In many facilities, people are one of the prime generators of static electricity. Therefore, wrist straps must be used while carrying out maintenance and service on the laser analyzer, to keep the person wearing it connected to ground potential. A wrist strap consists of the cuff that goes around the person's wrist and the ground cord that connects the cuff to the common point ground.

Work Surface

An ESD protective work surface is defined as the work area of a single individual, constructed and equipped to limit damage to ESD sensitive items. The work surface helps to define a specific work area in which ESD sensitive devices may be safely handled. The work surface is connected to the common point ground by a resistance to ground of 106 Ω to 109 Ω. This is done by using a soft bench mat, which is connected to ground, on the work surface. All

equipment must be connected to grounded outlets and all personnel must wear wrist straps connected to the bench mat using a cord.

A.4 Verification Sheets

Instrument Verification

Albeit the SITRANS SL provides a high long-term stability due to the built-in, maintenance-free reference gas cell, a verification should be carried out at regular intervals. Details of that procedure are described in section 9.1. (Page 168)

This procedure should be documented using the appropriate verification sheet provided later in this section. It can be separated from manual using a knife or a pair of scissors.

SITRANS SL O_2

Verification Sheet
Verification of SITRANS SL O_2

For reason of documentation please fill out this form

General Information

Tester		Name, company
Instrument type and SN		Enter device name as stated on the nameplate
Verification kit SN		

Settings for verification

	Original settings	Verification settings	
Integration time			See operating instructions, section 9.1
Path length		0.450 m	
Pressure source		manual	
Pressure manual value			
Temperature source		manual	
Temperature manual value			Your measurement

Verification set point and accuracy

Nominal concentr.	20.95 % vol. O_2	
Relative humidity		
Verification concentration		Taken from fig. “Verification set point’ in operating instructions, section 9.1

Verification error

Instrument error		Intrinsic uncertainty
Temperature error		Error of your temperature measurement
Pressure error		Error of your pressure measurement
Total uncertainty		Sum of above errors

Measurement

Zero value before meas.					
Measured values					
Average					
Standard dev.					
Zero value after meas.					

Result ☐ passed ☐ failed

‘Passed’ means if average is inside a range “verification concentration ± total uncertainty”, ‘failed’ means average is outside this range

Date Signature of tester

Figure A-3 Verification Sheet SITRANS SL O2

SITRANS SL CO

Verification Sheet
Verification of SITRANS SL CO

For reason of documentation please fill out this form

General Information

Tester		Name, company
Instrument type and SN		Enter device name as stated on the nameplate
Verification kit SN		

Settings for verification

	Original settings	Verification settings	
Integration time			See operating instructions
Path length			See certificate
Pressure source			See operating instructions
Pressure manual value			See certificate
Temperature source			See operating instructions
Temperature manual value			Your measurement

Verification set point and accuracy

Verification concentration		Taken from fig. “Verification set point’ in operating instructions, section 9.1

Verification error

Instrument error		Intrinsic uncertainty
Temperature error		Error of your temperature measurement
Total uncertainty		Sum of above errors

Measurement

Measured values					
Average					
Standard dev.					

Result

☐ passed

☐ failed

‘Passed’ means if average is inside a range “verification concentration ± total uncertainty”, ‘failed’ means average is outside this range

Date Signature of tester

Figure A-4 Verification sheet CO

A.5 Product documentation

Process instrumentation product documentation is available in the following formats:

- Certificates (http://www.siemens.com/processinstrumentation/certificates)
- Downloads (firmware, EDDs, software) (http://www.siemens.com/processinstrumentation/downloads)
- Catalog and catalog sheets (http://www.siemens.com/processinstrumentation/catalogs)
- Manuals (http://www.siemens.com/processinstrumentation/documentation)
  You have the option to show, open, save, or configure the manual.
  - "Display": Open the manual in HTML5 format
  - "Configure": Register and configure the documentation specific to your plant
  - "Download": Open or save the manual in PDF format
  - "Download as html5, only PC": Open or save the manual in the HTML5 view on your PC

You can also find manuals with the Mobile app at Industry Online Support (https://support.industry.siemens.com/cs/ww/en/sc/2067). Download the app to your mobile device and scan the device ID link.

Product documentation by serial number

Using the PIA Life Cycle Portal, you can access the serial number-specific product information including technical specifications, spare parts, calibration data, or factory certificates.

Entering a serial number

1. Open the PIA Life Cycle Portal (https://www.pia-portal.automation.siemens.com).
2. Select the desired language.
3. Enter the serial number of your device. The product documentation relevant for your device is displayed and can be downloaded.

To display factory certificates, if available, log in to the PIA Life Cycle Portal using your login or register.

Scanning an ID link

1. Scan the ID link on your device with a mobile device.
2. Click "PIA Portal".

To display factory certificates, if available, log in to the PIA Life Cycle Portal using your login or register.

A.6 Marking A in accordance with KC (Korea)

KC marking for use in Korea only

Device version	Operating instructions
A급 기기	이 기기는 업무용(A급) 전자파 적합기기로서 판매자 또는 사용자는 이 점을 주의하시기 바라며 가정 외의 지역에서 사용하는 것을 목적으로 합니다.
Class A device	This device is classified as having electromagnetic resistance suitable for industrial use (Class A) and may be used universally, apart from in domestic use.

To return a product to Siemens, see Returns to Siemens (www.siemens.com/returns-to-siemens).

Contact your Siemens representative to clarify if a product is repairable, and how to return it. They can also help with quick repair processing, a repair cost estimate, or a repair report/ cause of failure report.

NOTICE
Decontamination The product may have to be decontaminated before it is returned. Your Siemens contact person will let you know for which products this is required.

Product documentation and support

B

B.1 Product documentation

Process instrumentation product documentation is available in the following formats:

- Certificates (http://www.siemens.com/processinstrumentation/certificates)
- Downloads (firmware, EDDs, software) (http://www.siemens.com/processinstrumentation/downloads)
- Catalog and catalog sheets (http://www.siemens.com/processinstrumentation/catalogs)
- Manuals (http://www.siemens.com/processinstrumentation/documentation)
  You have the option to show, open, save, or configure the manual.
  - "Display": Open the manual in HTML5 format
  - "Configure": Register and configure the documentation specific to your plant
  - "Download": Open or save the manual in PDF format
  - "Download as html5, only PC": Open or save the manual in the HTML5 view on your PC

You can also find manuals with the Mobile app at Industry Online Support (https://support.industry.siemens.com/cs/ww/en/sc/2067). Download the app to your mobile device and scan the device ID link.

Product documentation by serial number

Using the PIA Life Cycle Portal, you can access the serial number-specific product information including technical specifications, spare parts, calibration data, or factory certificates.

Entering a serial number

1. Open the PIA Life Cycle Portal (https://www.pia-portal.automation.siemens.com).
2. Select the desired language.
3. Enter the serial number of your device. The product documentation relevant for your device is displayed and can be downloaded.

To display factory certificates, if available, log in to the PIA Life Cycle Portal using your login or register.

Scanning an ID link

1. Scan the ID link on your device with a mobile device.
2. Click "PIA Portal".

To display factory certificates, if available, log in to the PIA Life Cycle Portal using your login or register.

B.2 Technical support

Technical support

If this documentation does not completely answer your technical questions, you can enter a Support Request (http://www.siemens.com/automation/support-request).

For help creating a support request, view this video here (www.siemens.com/opensr).

Additional information on our technical support can be found at Technical Support (http://www.siemens.com/automation/csi/service).

Service & support on the Internet

In addition to our technical support, Siemens offers comprehensive online services at service & support (http://www.siemens.com/automation/serviceandsupport).

Contact

If you have further questions about the device, contact your local Siemens representative, by doing the following:

1. Visit Contact at Siemens (http://www.automation.siemens.com/partner).
2. Select "All Products and Branches" > "Products & Services" > "Industrial automation".
3. Choose either "Process analytics" or "Process instrumentation", depending on your product.
4. Select the product category ("Pressure measurement", for example), then select your product.
5. Click "Search".
   The contacts for your product in all regions display.

Contact address for business unit:
Siemens AG
Digital Industries
Process Automation
Östliche Rheinbrückenstr. 50
76187 Karlsruhe, Germany

List of abbreviations

C

Abbreviation / symbol	Explanation
″	Inch - 1″ ≙ 25.4 mm
<	Less than
>	Greater than
≤	Less than or equal to
≥	Greater than or equal to
°	Degrees
°C	Degrees celsius - 1°C ≙ 1.8 °F
°F	Degrees fahrenheit - 1°F ≙ 0.555... °C
A	**A**mpere
AC	**A**lternating **C**urrent
ANSI	**A**merican **N**ational **S**tandards **I**nstitute
API	**Ap**plication **I**nterface
ATEX	Explosive atmospheres (French: **At**mosphères **Ex**plosibles)
Bit	**Bi**nary digi**t**
cm	Centimeter
CO	**C**arbonmon**o**xide
CP	**C**ommunication **P**rocessor
CPU	**C**entral **P**rocessing **U**nit
CSA	**C**anadian **S**tandards **A**ssociation
DC	**D**irect **C**urrent
DIN	German Standardization Institute (German: **D**eutsches **I**nstitut für **N**ormung)
DN	**D**iameter **n**ominal
DP	**D**istributed **P**eripheral I/O
e. g.	For example (from Latin: **e**xempli **gratia**)
EEPROM	**E**lectrically **E**rasable **P**rogrammable **R**ead **O**nly **M**emory
EMC	**E**lectro**m**agnetic **c**ompatibility
EN	European Standard (German: **E**uropäische **Norm**)
ESD	**E**lectro**s**tatic **D**ischarge
EU	**E**uropean **U**nion
Ex	**Ex**plosive atmosphere
FFKM	Perfluoro-elastomer, a plastic
FKM	Fluoroelastomer, a plastic
FM	**F**actory **M**utual, certifying body in the USA for hazardous area approvals
FPGA	**F**ield **p**rogrammable **g**ate **a**rray
FTP	**F**oiled **t**wisted **p**air
GSD	Device master data file (German: **G**eräte-**S**tamm-**D**atei)

Abbreviation / symbol	Explanation
hPa	**h**ecto**Pa**scal
HU	**H**eight **u**nit for computer housings, 1 HU ≙ 1¾" ≙ 44.45 mm
IEC	**I**nternation **E**lectrotechnical **C**ommittee
I/O	**I**nput/**O**utput
IP	**I**ngress **p**rotection
K	**K**elvin
kbps	**K**ilo**b**it **p**er **s**econd
kg	**K**ilo**g**ram
kHz	**K**ilo**h**er**z**
l/min	**L**iters per **min**ute
LAN	**L**ocal **A**rea **N**etwork
lbs	pounds
LCD	**L**iquid **c**rystal **d**isplay
LD	**L**aser **d**iode
LDS	**L**aser **D**iode **S**pectrometer
LDSComm	**L**aser **D**iode **S**pectrometer **C**ommunication software
LED	**L**ight **e**mitting **d**iode
LUI	**L**ocal **U**ser **I**nterface
LVD	**L**ow **V**oltage **D**irective
m	**M**eter
mA	**M**illi**a**mpere
MAWP	**M**aximum **A**llowable **O**perating **P**ressure
max.	**Max**imum
mg/Nm³	**M**illi**g**rams per normal cubic meter (at 0°C and 1,013 hPa)
min.	**Min**imum
MLFB	Machine-readable product number (German: **M**aschinenlesbare Fabrikatenummer)
mm	**M**illi**m**eter
mm²	Square millimeters
MPa	**M**ega**pa**scal
MPI	**M**essage **p**assing **I**nterface
MSB	**M**ost **s**ignificant **b**yte
n. B.	As required
NAMUR	Standards working committee for measuring and control technology in the chemical industry.
NC	**N**ot **c**onnected
NFPA	**N**ational **F**ire **P**rotection **A**ssociation
O_2	Oxygen
PA	**P**rocess **A**utomation
PC	**P**ersonal **C**omputer
PCB	**P**rinted **C**ircuit **B**oard
PCMCIA	**P**ersonal **C**omputer **M**emory **C**ard **I**nternational **A**ssociation
PCS	**P**rocess **C**ontrol **S**ystem

Abbreviation / symbol	Explanation
PDM	**P**rocess **D**evice **M**anager
PE	**P**rotective **E**arth (terminal)
PG	**P**rogramming **d**evice
PI	**P**rocess **I**nterface
PLC	**P**rogrammable **L**ogic **C**ontroller
PN	**P**ressure **n**ominal
ppm	**P**arts **p**er **m**illion
PROFIBUS	**Pro**cess **Fi**eld **Bus**
PTB	German Federal Physical and Technical Institute (German: **P**hysikalisch-**T**echnische **B**undesanstalt)
PUR	**P**oly**ur**ethane, a plastic
QAL	**Q**uality **A**ssurance **L**evel
RAM	**R**andom **A**ccess **M**emory
RHU	**R**eceiver **H**ousing **U**nit
RTU	**R**eceiver **T**ube **U**nit
Rx	Receive (Rx) identifies a receiver
s	**S**econd
SELV	**S**afety **E**xtra **L**ow **V**oltage
SM374	Simulation module 374
SMA	**S**ub-**M**iniature **A**, a coaxial connector type
STP	**S**creened **t**wisted **p**air
TCP/IP	**T**ransmission **C**ontrol **P**rotocol/**I**nternet **P**rotocol; a reference model for communication on the Internet
THU	**T**ransmitter **H**ousing **U**nit
TTU	**T**ransmitter **T**ube **U**nit
Tx	Transmit (Tx) identifies a transmitter
UL	**U**nderwriters **L**aboratories, a US certifying body
UV	**U**ltra**v**iolet
V	**V**olt
VA	**V**olt-**a**mpere
Vol%	Volume percent
vpm	**V**olume **p**arts per **m**illion
Δ	Difference (Greek: delta)
µC	Microcontroller
Ω	Ohm(s)
UKEx	Marking for explosion protection according to UKCA
IECEx	Marking for explosion protection according to IEC60079

Glossary

Analog

Continuous representation of a variable, e.g. voltage, using a scale, in contrast to "Digital".

ATEX

ATEX stands for both the directives of the European Community for the field of explosion protection: ATEX 2014/34/EU.

Automation system

An automation system is a programmable logic controller consisting of at a central processing unit, a variety of input and output modules as well as operator control and monitoring (HMI) devices.

Bus

A cable or conductor system used for data transfer among the components of a computer system. Buses are characterized by the number of bits they can transfer at any one time. There are serial bus systems (one bit after the other) and parallel bus systems (multiple bits simultaneously over several lines).

CSA

The Canadian Standards Association sets standards for North America. The CSA also certifies products used in hazardous areas.

Digital

Representation of a variable, e.g. time, in the form of characters or numbers. In its digital representation, this variable can be changed only in pre-defined steps, in contrast to "Analog".

Div. 0

Area in which dangerous, potentially explosive gaseous atmospheres can form frequently, constantly or over long time periods during the normal operation of a device. Div 0 (US standard) corresponds to Zone 0 (European standard).

Div. 1

Area in which dangerous, potentially explosive gaseous atmospheres are permanently present during the normal operation of a device. Div 1 (US standard) corresponds to Zone 0 and Zone 1 (European standard).

Div. 2

Area in which normally less dangerous, potentially explosive gaseous atmospheres form during the normal operation of a device. Div 2 (US standard) corresponds to Zone 2 (European standard).

EEPROM

Electrically **E**rasable **P**rogrammable **R**ead **O**nly **M**emory

EEPROMs are often used where individual bytes of data (e.g. configuration data or runtime meters) change over time and must be stored safely in the event of a mains power failure.

Electro Magnetic Compatibility

Definition as per the EMC law:

EMC is the capability of a device to operate satisfactorily in an electromagnetic environment without itself emitting electromagnetic signals which interfere with other devices in that environment.

Endian

Date is sometimes saved in a different order in certain computer architectures. Intel-based computers, for example, save the data differently from the Siemens controllers (S7), namely, in reverse sequence. The byte sequence from Intel, termed Little Endian, is therefore the reverse S7 byte sequence, Big Endian. The following applies to these two forms:

- Little Endian: The most significant byte is located at the right-hand end of a word.
- Big Endian: The most significant byte is located at the left-hand end of a word.

Ethernet

This is a specific type of local network that works according to a standard defined by Intel, DEC and Xerox.

FBD

A **F**unction **B**lock **D**iagram is a graphic representation of control functions. Each control task (function) has a corresponding symbol.

FM, Factory Mutual

FM Global is a U.S.-based insurance company, with offices worldwide, that specializes in loss prevention services primarily to large corporations throughout the world in the Highly Protected Risk (HPR) property insurance market sector. "FM Global" is the communicative name of the company, whereas the legal name is "Factory Mutual Insurance Company". The company offers general and specialized risk management, materials research and testing and certifications in the fire security and explosion protection fields.

Interface, multi-point

MPI is the programming interface of SIMATIC S7/M7. Allows remote access to programmable modules, text-based displays and OPs from central locations. The MPI nodes can intercommunicate.

LAD

Ladder **D**iagram -> Graphic representation of controller functions based on a circuit diagram from protection technology. The current paths, however, are not arranged horizontally in relation to one another and the symbols deviate.

Modbus

The Modbus protocol is a communications protocol based on a master/slave or client/server architecture. The Modbus protocol was defined by Modicon in 1979 for communication with its programmable controllers. Modbus is a de facto standard in industry, since it is an open protocol.

Modbus is used to connect a master (e.g. a PC) and several slaves (e.g. measuring and control systems). There are two versions of Modbus: one for the serial interface and one for Ethernet.

MSB

MSB is the byte (or octet) in that position of a multi-byte number which has the greatest potential value.

PC card

Trademark of the Personal Computer Memory Card International Association (PCMCIA). Designation for auxiliary cards that conform with PCMCIA specifications. A PC card that has roughly the size of a credit card can be plugged into a PCMCIA slot. Version 1 specifies cards of Type I with a thickness of 3.3 millimeters, which are designed mainly for use as external memory. Version 2 of the PCMCIA specification also defines cards of Type II with a thickness of 5 mm and cards of Type III with a thickness of 10.5 mm. Type II cards can realize devices such as modems, fax cards and network interface cards. Type III cards are equipped with devices that require more space, for example wireless communication modules, or rotary storage media such as hard disk drives, for example.

PCMCIA

Association consisting of approx. 450 member companies of the computer industry whose focus is set on providing worldwide standards for miniaturization and flexible use of PC expansion cards in order to provide basic technologies to the market.

PROFIBUS

Process **F**ield **B**us-> International fieldbus standard to EN 50170/IEC 61158

PROFIBUS DP

PROFIBUS-DP (distributed peripheral I/O) is used for controlling sensors and actuators using a central controller in production engineering. It is also used in connection with "distributed intelligence", i.e. connecting multiple controllers to form a network. It provides data transmission up to 12 Mbps on twisted-pair cables and data transmission over sliding contacts for mobile subscribers in exceptional cases or optical data transmission in unobstructed space.

PROFIBUS/MPI

Process **Fi**eld **Bus** (standard bus system for process applications)

RS 232

A recognized industrial standard for serial data transmission, and applies to cable lengths up to 15 m. Differential evaluation is not possible with RS 232. The sending and receiving of data take place on different lines.

RS 485

RS 485 is an interface standard for line-based, differential, serial data transmission. RS 485 uses a pair of cables in order to transmit one inverted version and one non-inverted version of the data signal. The original data signal is reconstructed at the receiver from the difference between these two signals. It is then possible to use significantly longer transmission links and higher speeds than with RS 232. Furthermore, several transmitters and several receivers can be connected to one pair of conductors.

STEP 7

STEP 7 is programming software for the S7-300 and S7-400 controller families

STL

Statement **l**ist -> User program in which control functions are listed in the form of statements.

Termination

The termination (lat. terminare for "end") used in telecommunications technology describes the completion of a signal path. The termination results in minimization of signal reflections which could otherwise lead to interferences. The termination is normally used at the physical end of a signal path.

Zone 0

Area in which dangerous, potentially explosive gaseous atmospheres can form frequently, constantly or over long time periods during the normal operation of a device.

Zone 1

Area in which a dangerous, potentially explosive gaseous atmosphere occasionally forms during the normal operation of a device.

Zone 2

Area in which a dangerous, potentially explosive gaseous atmosphere usually doesn't form, or only for a short time period, during the normal operation of a device.

Index

A

Alarm groups, 189
alignment kit, 167
Alignment procedure, 92, 97
Application, 44

B

Benefit, 44

C

Cable selection, 62
calibration verification kit, 167
Catalog
    catalog sheets, 223, 225
Certificates, 223, 225
Connection cable, 30, 40, 62, 87
Customer Support, (Refer to Technical support)

D

Disposal, 214
Downloads, 223, 225
DS 33 data type, 149
Dust load, 60

F

Further information, 74

H

Hardware, 65, 66, 68
Hazardous area
    Qualified personnel, 18
Hotline, (Refer to Support request)

I

Installation
    PROFIBUS DP, 147

L

Liability, 72
Lithium batteries
    Return, 215
    Safety, 19
Local user interface
    Components, 127
Local User Interface, 60
Log book, 189
Loop cable, 62, 86
Loop cable junction box
    Receiver unit, 86

M

Manuals, 223, 225
Modbus address
    3000 ... 3999, 159
    30000 ... 39999, 156
    40000 ... 49999, 158
    5000 ... 5999, 160
    7000 ... 7999, 160
Modifications
    correct usage, 14
    improper, 14

O

Operating function
    Overview, 127

P

PROFIBUS DP
    Installation, 147
PROFIBUS DP
    System configuration, 66
Proper use, 9

Q

Qualified personnel, 10, 18

R

Receiver junction box cable, 29
Return procedure, 215, 224

S

Safety
  Cable, 72
  Electric, 71
  Laser, 71
  Pressure, 72
Sections, 44
Sensor connection cable, 28, 40
Service, 216, 226
Service and support
  Internet, 216, 226
Software, 65, 66, 68
Status byte coding, 153
Status Word 1, 161
Status Word 2, 161
Status Word 3, 162
Status Word 4, 163
Support, 216, 226
Support request, 216, 226

T

Technical support, 216, 226
  partner, 216, 226
  personal contact, 216, 226
Transmission, 60
Transmitter junction box cable, 30

V

verification kit, 167