Instrument Expert
Original factory
packaging
www.keruiyiqi.cn

MICHELL Instruments

QMA401
Trace Moisture Analyzer
User's Manual

97450 Issue 3
November 2020

Please fill out the form(s) below for each instrument that has been purchased.

Use this information when contacting Michell Instruments for service purposes.

Product Name	
Order Code	
Serial Number	
Invoice Date	
Installation Location	
Tag Number	

Product Name	
Order Code	
Serial Number	
Invoice Date	
Installation Location	
Tag Number	

Product Name	
Order Code	
Serial Number	
Invoice Date	
Installation Location	
Tag Number	

QMA401

For Michell Instruments' contact information please go to
www.michell.com

© 2020 Michell Instruments
This document is the property of Michell Instruments Ltd and may not be copied or otherwise reproduced, communicated in any way to third parties, nor stored in any Data Processing System without the express written authorization of Michell Instruments Ltd.

Contents

Safety viii
Warnings viii
Electrical Safety viii
Pressure Safety viii
Hazardous Materials (WEEE, RoHS3 & REACH) viii
Calibration (Factory Validation) ix
Repair and Maintenance ix
Abbreviations x

1 INTRODUCTION 1
1.1 General 1
1.2 Theory of Operation 2
1.3 Sample Gas Path 2
1.4 Internal Sampling Options 3

2 INSTALLATION 6
2.1 Analyzer Storage Instructions 6
2.2 Unpacking the Instrument 7
2.3 Electrical Requirements 8
2.4 Rear Panel Connections 9
2.5 Pressure Safety 10
2.6 Connection of Gas Supplies 10

3 OPERATION 13
3.1 General Operational Information 13
3.2 First Time Operation 13
3.2.1 Regulating Sensor Pressure 14
3.2.2 Analyzer Setup 15
3.3 Menu Structure 16
3.4 Description of Measured Parameters 17
3.5 Main Screen 17
3.5.1 Large Display Mode 19
3.5.2 Full Screen Graph 19
3.6 Main Screen Sub Menus 20
3.6.1 Warning Screen 20
3.6.2 Logging Screen 21
3.6.3 Alarm Screen 22
3.6.4 Field Calibration Screen 23
3.6.5 Monitor Screen 27
3.7 Settings Menu 28
3.7.1 Measurement Screen 29
3.7.2 Pressure Input 32
3.7.3 Outputs Screen 34
3.7.4 HMI Screen 35
3.7.5 Real Time Clock Screen 36
3.7.6 Software Communications Screen 37
3.7.7 Ethernet Screen 37
3.7.8 Field Calibration History 38
3.7.9 About Screen 38
3.8 Sampling Guidelines 39
3.9 Measurement Cycle 42
3.10 Calibration Cycle 44

4 MAINTENANCE 46
4.1 Removal and Replacement of the Power Supply Fuse 47
4.2 Removal and Replacement of the Dryer Module 47

5 CALIBRATION 49
5.1 Traceability 49

6 APPLICATION SOFTWARE OVERVIEW 51
6.1 System Requirements 51
6.2 System Connection 51
6.3 Getting Started 52
6.3.1 Connection Method (Serial Connection (RS485 or USB) 53
6.3.1.1 RS485 Connection 53
6.3.1.2 USB Connection 53
6.3.1.3 Modbus TCP Connection (Ethernet) 53
6.4 Main Window 54
6.5 Using the Chart 55
6.5.1 Chart Options Window 56
6.6 Data Logging 57
6.6.1 Configuring Logging Start Time 58
6.6.2 Configuring Logging Stop Time 58
6.6.3 Starting the Log 58
6.6.4 Viewing a Log 58
6.7 Parameters / Field Calibration 58
6.7.1 Field Calibration 59

7 SHIPPING 60
7.1 Preparation for Shipping and Packing 60

Tables

Table 1 Main Screen Parameters 18
Table 2 Alarm Screen Parameters 22
Table 3 Calibration Screen Parameters 23
Table 4 Monitor Screen Parameters 27
Table 5 Measurement Screen Parameters 29
Table 6 Outputs Screen Parameters 34
Table 7 HMI Setup Screen Parameters 35
Table 8 Real Time Clock Screen Parameters 36
Table 9 Software Communications Screen Parameters 37
Table 10 Ethernet Screen Parameters 37
Table 11 Modbus Register Map 72

Figures

Figure 1 Measurement System 2
Figure 2 Internal Sampling Options....5
Figure 3 Power Connection....8
Figure 4 Rear Panel Connections 9
Figure 5 Typical Gas Connections....11
Figure 6 Initializing Overlay....13
Figure 7 Display During Heating Period 13
Figure 8 Typical Display 15
Figure 9 Menu Structure 16
Figure 10 Main Screen....17
Figure 11 Large Display Mode 19
Figure 12 Full Screen Graph....19
Figure 13 Status Screen....20
Figure 14 Logging Screen 21
Figure 15 Front Panel 21
Figure 16 Alarm Screen 22
Figure 17 Field Calibration Screen....23
Figure 18 Field Calibration Screen 2....24
Figure 19 Field Calibration Screen 3....25
Figure 20 Field Calibration Screen 4....25
Figure 21 Field Calibration Screen 5....26
Figure 22 Monitor Screen....27
Figure 23 Settings Menu Screen 28
Figure 24 Measurement Screen 29
Figure 25 Carrier Gas Screen....30
Figure 26 Measurement Screen 31
Figure 27 External Options....32
Figure 28 Fixed Options....32
Figure 29 Atmos. Option....33
Figure 30 User Gas Setup Screen 33
Figure 31 Outputs Screen 34
Figure 32 HMI Screen....35
Figure 33 Real Time Clock Screen....36
Figure 34 Software Communications Screen....37
Figure 35 Ethernet Screen 37
Figure 36 Calibration History Screen 38
Figure 37 About Screen 38
Figure 38 Measurement Cycle (Phase 1) – Dried Sample Flow 42
Figure 39 Measurement Cycle (Phase 2) Calibration Flow 43
Figure 40 Calibration Cycle (Phase 1) – Dried Sample Flow....44
Figure 41 Calibration Cycle (Phase 2) – Sample Flow 45
Figure 42 Typical QMA401 Calibration Certificate 50

Appendices

Appendix A Technical Specification 62
Appendix B Calculating Conversion Factors for Gas Mixes 64
Appendix C Modbus Holding Register Map 66
C.1 Set Points and Ranges 83
C.2 Gases for Gas Correction Values 84
Appendix D Quality, Recycling, Compliance & Warranty Information 86
Appendix E Return Document & Decontamination Declaration 88

Safety

The instrument is designed to be completely safe when installed and operated correctly in accordance with the information provided in this manual.

This manual contains all the required information to install, operate and maintain this product. Prior to installation and use of this product, this entire manual should be read and understood. Installation and operation of this product should be carried out by suitably competent personnel only. The installation and operation of this product must be in accordance with the instructions provided and according to the terms of any associated safety certificates. Incorrect installation and use of this product other than those described in this manual and other than its intended purpose will render all warranties void.

This product meets the essential protection requirements of the relevant EU directives. Further details of applied directives may be found in the product specification.

Electricity and pressurized gas can be dangerous. This product must be installed and operated only by suitable trained personnel.

Warnings

Where this hazard warning symbol appears in the following sections, it is used to indicate areas where potentially hazardous operations need to be carried out and where particular attention to personal and personnel safety must be observed.

Where this symbol appears in the following sections it is used to indicate areas of potential risk of electric shock.

Electrical Safety

Ensure electrical safety is complied with by following the directions provided here and observing all local operation & installation requirements at the intended location of use.

This product is completely safe when using any options and accessories supplied by the manufacturer of this product for use with it. Refer to Section 2 (Installation) of this manual for further details.

Pressure Safety

For this product to operate satisfactorily, pressurized gas must be connected to it. Observe all the information contained within this manual and all local operation & installation requirements at the intended location of use. Refer to Section 2 (Installation) of this manual for further details.

Hazardous Materials (WEEE, RoHS3 & REACH)

This product does not contain or release any prohibited chemicals listed on the SVHC (Substances of Very High Concern) Candidate List. During the intended normal operation of this product it is not possible for the user to come into contact with any hazardous materials. This product is designed to be recyclable except where indicated, see relevant sections in this manual for further details.

Calibration (Factory Validation)

Prior to shipment, the instrument undergoes stringent factory calibration to traceable standards. Due to the inherent stability of the instrument, regular factory calibration is not required under normal operating conditions. The instrument should perform reliably for many years with just basic maintenance, housekeeping and regular field calibrations from the internal reference (moisture generator) or a known external reference.

There are, however some consumables that will require periodic replacement.

- Moisture generator – typical lifetime of around 3 years.
- Desiccant column – typical lifetime of around 2 years, but this strongly depends on the moisture content of the sample gas. The drier the sample gas, the longer the lifetime of the desiccant.

Michell Instruments can provide a fully traceable factory calibration service for the instrument and it is recommended that this is considered at intervals of every year of the analyzer's life. Please contact your local Michell Instruments' office or representative for further details (www.michell.com).

Repair and Maintenance

Apart from user-replaceable components required for routine operational maintenance described above, the analyzer must only be maintained either by the manufacturer or an accredited service agent. Refer to www.michell.com for details of Michell Instruments' worldwide offices contact information.

Abbreviations

The following abbreviations are used in this manual:

A	ampere
AC	alternating current
atm	pressure unit (atmosphere)
bara	pressure unit (=100 kP or 0.987 atm) (absolute)
barg	pressure unit (=100 kP or 0.987 atm) gauge
°C	degrees Celsius
°F	degrees Fahrenheit
EU	European Union
hr	hour
Hz	Hertz
IEC	International Electrotechnical Commission
IP	Internet protocol
ml/min	milliliters per minute
mg/m^3	milligrams per cubic meter
lbs/MMscf	pounds per million standard cubic feet
mA	milliampere
mins	minutes
mmHg	millimeter of mercury
Pa	pascal
ppm_V	parts per million (by volume)
ppm_W	parts per million (by weight)
psia	pound(s) per square inch (absolute)
psig	pound(s) per square inch (gauge)
RH	relative humidity
RS485/232	standards defining the electrical characteristics of drivers & receivers
RTC	real time clock
RTU	Remote Terminal Unit
SD	storage device card
UART	universal asynchronous receiver/transmitter
USB	Universal Serial Bus
V	Volts
"	Inch
Δ	delta
%	percentage
Ω	ohms

1 INTRODUCTION

1.1 General

The QMA401 Moisture Analyzer is designed to provide reliable, fast and accurate measurement of trace moisture content in a wide variety of applications where keeping moisture levels as low as possible is of critical importance.

The high-contrast LCD touchscreen display presents all measured data to the user in a clear and understandable format. The main display incorporates a real-time trend graph and alarm indicators based on the NAMUR 102 standard. A powerful and intuitive HMI makes control, logging and configuration of analyzer parameters straightforward.

The instrument provides two user-configurable analog outputs, and ModBus RTU/TCP communications, allowing it to interface with a SCADA DCS, or by a computer using the dedicated application software. A pair of adjustable isolated alarm contacts allow the QMA401 to be used for direct process control.

The QMA401 offers:

- ModBus RTU/TCP
- Datalogging to SD Card
- 2 user-configurable analog outputs
- Status and Process Alarms

Minimal & Straightforward Maintenance

Sophisticated instruments are often complicated and require experience and special care in use, increasing cost of ownership. The QMA401 differs through its very uncomplicated approach to field service; the desiccant column is easy to replace via the dryer service panel on the rear of the instrument. The moisture generator has an average life span of 3 years before maintenance is required.

Automated Calibration for Continued Reliability

The QMA401 incorporates an integrated automatic calibration system for complete user confidence. Periodic calibration checks of sensor performance can be initiated on demand, or automatically (at user defined intervals and time of day), providing a verification against the calibrated moisture generator or an external reference. The moisture generator at the core of this system is supplied with a calibration traceable to NPL and NIST.

During an internal calibration cycle, the Data Hold function will prevent any interruption of dependant processes by holding the analog outputs at the same level for the duration of the calibration.

Integrated Sample Handling Components

The QMA401 features an optional bypass arrangement to increase transport speed of the sample.

A pressure regulator can also be specified to increase the range of acceptable input pressure (rated to 300 barg input pressure), and to protect the instrument against pressure shocks.

1.2 Theory of Operation

The Quartz Crystal Microbalance (QCM) technology for moisture measurement is based on monitoring the frequency of a hygroscopic-coated quartz crystal with specific sensitivity to water vapor.

Bulk adsorption of water vapor onto the coated crystal causes an increase in the crystals effective mass, modifying its oscillation frequency in a very precise and repeatable manner. The frequency change is in proportion to the water vapor pressure in the sample gas, providing a direct measurement of moisture content.

The sorption process is fully reversible with no long-term drift effect, giving a highly reliable and repeatable measurement.

1.3 Sample Gas Path

The QMA401 measurement system must be supplied with gas at the required pressure (to match that of its calibration) via the VCR connection on the rear of the instrument. The flow is controlled automatically.

The sensor cell is located at the end of the sensor block and contains the sensor and reference oscillators. *Figure 1* shows a schematic diagram of this sampling system:

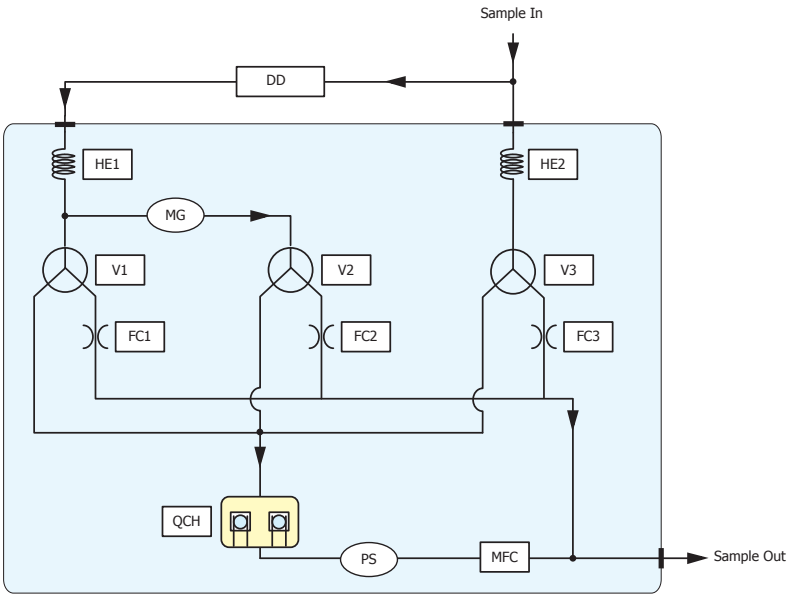

Key			
DD	Desiccant column	**MG**	Moisture generator
MFC	Mass flow controller	**V1, V2, V3**	Solenoid Valves
QCH	Sensor cell	**HE1/HE2**	Heat exchanger
PS	Pressure sensor	**FC1**	Flow control

Figure 1 *Measurement System*

1.4 Internal Sampling Options

The QMA401 is available with a Pressure regulator, or a fast loop bypass with flow control. Either of these options can be configured independently or together with either an internal or external particulate filter:

- Pressure regulator
- Fast-loop bypass with flow control

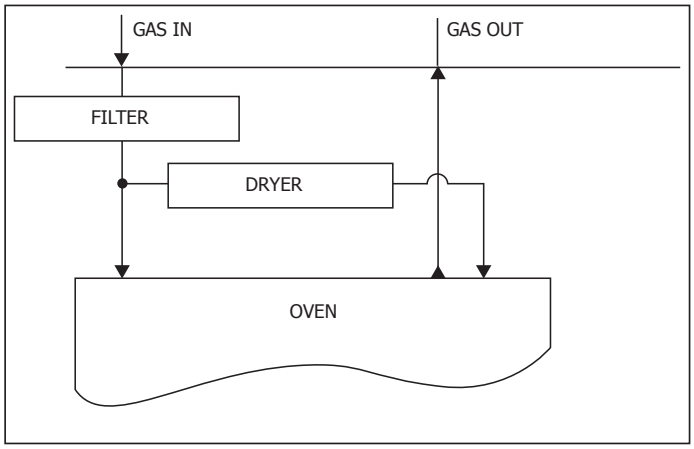

S0 – No sample system. With 15 µm internal filtration

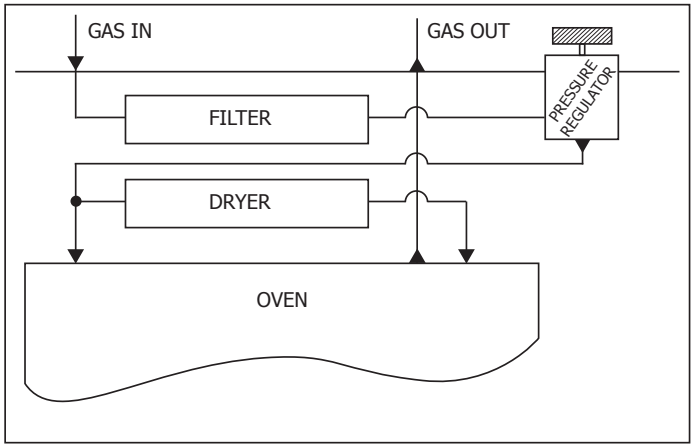

S1 – Input pressure regulator. With 15 µm internal filtration

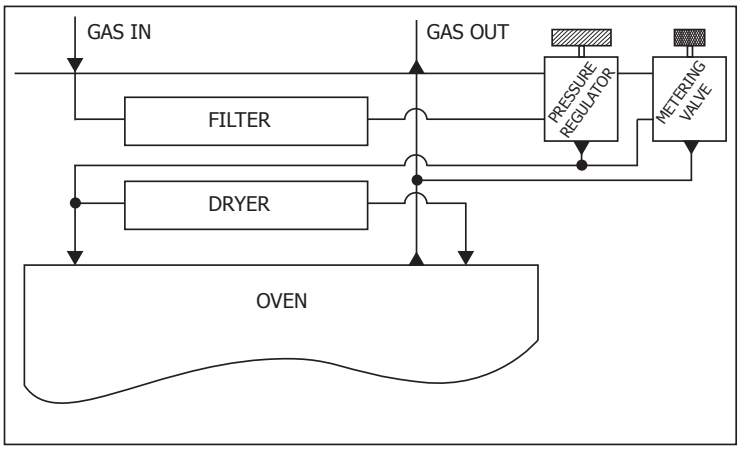

S2 – Input pressure regulator and Fast-loop bypass with flow control. With 15 µm internal filtration

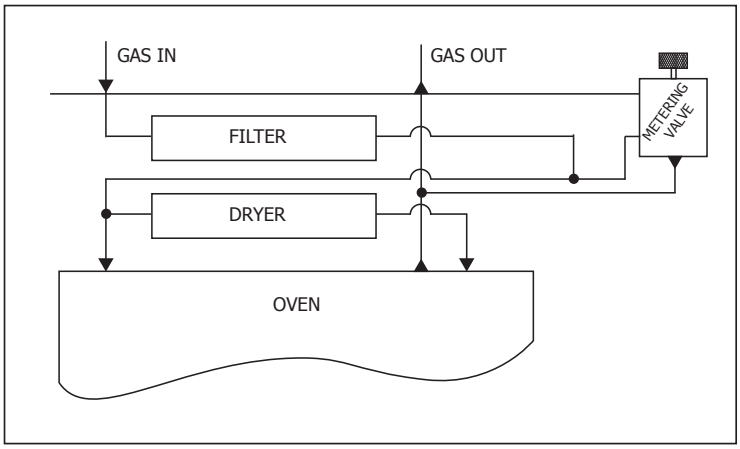

S3 – Fast-loop bypass with flow control. With 15 µm internal filtration.

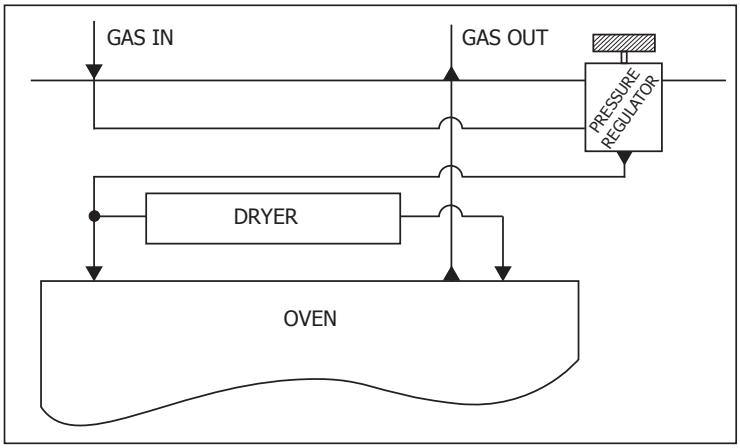

S4 – Input pressure regulator. External 15 µm filter supplied

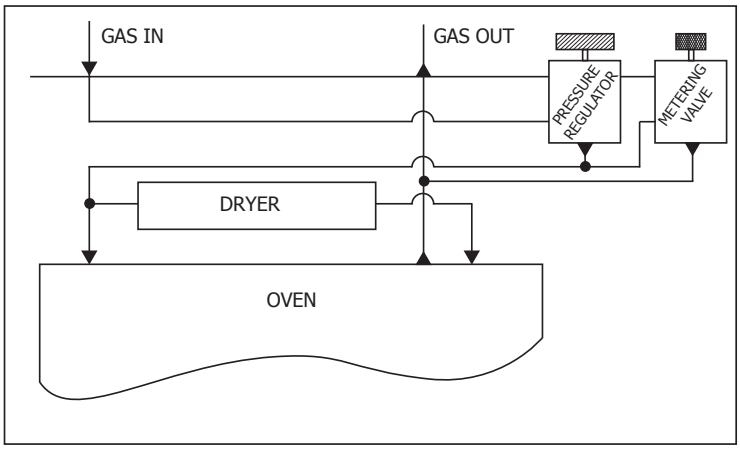

S5 – Input pressure regulator and fast-loop bypass with flow control. External 15 µm filter supplied

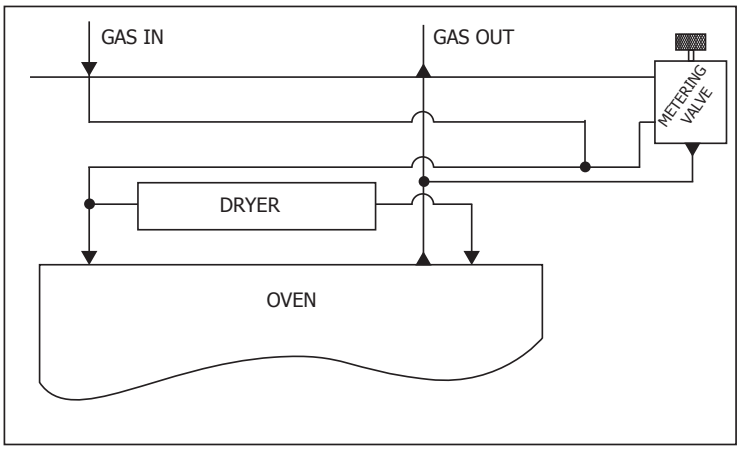

S6 – Fast-loop bypass with flow control. External 15 µm filter supplied

Figure 2 *Internal Sampling Options*

2 INSTALLATION

2.1 Analyzer Storage Instructions

In order for this product to be functional upon installation it should be stored in accordance with the guidelines below:

- The product must be housed in a sheltered area, out of direct sunlight and rain.
- The product should be stored to minimize the possibility of sitting in ground water.
- The temperature within the storage environment should be maintained between -20 and +60 °C (-4 and +140 °F).
- The humidity within the storage environment must be non-condensing.
- The storage environment must not expose the analyzer to any corrosive elements.
- The product may stay assembled with its sample conditioning system (if supplied).
- All electrical and process connections should remain disconnected and capped.
- All protective coatings should remain in place until installation.
- For prolonged periods of storage, the lid of the packaging crate should be removed to allow air to circulate.
- Any documentation supplied with the product should be removed from the packaging crate and stored elsewhere to protect its integrity.

For the period from installation of the product to commissioning start-up, the following precautions should be followed:

- The product and associated sampling system (if supplied) must remain isolated from the process gas, and the enclosure should remain closed to ensure ingress protection is maintained.
- If supplied, the sampling system enclosure heating/thermostat circuit should be operated if the climatic temperature might fall below +5 °C (+41 °F).
- At time of start-up the procedures contained in the user manuals for both analyzer and sampling system must be followed.

If the product was previously in service/operation then the following precautions should be followed before storage:

- Upon isolation from the gas sample the entire system should be purged with a dry nitrogen gas before powering down of the analyzer.
- All connections and ports (gas and electrical) to the analyzer or sample system (if provided) should be capped.
- If the product is not removed from its location, the electrical grounding of the analyzer should remain in place.
-

2.2 Unpacking the Instrument

Open the crate and carefully unpack the instrument.

NOTE: Retain the packaging in case the instrument is returned for factory calibration or service.

The accessories box should contain the following items:

- Traceable calibration certificate
- SD memory storage card
- USB communications cable
- IEC power cable
- Application software CD

If there are any shortages please notify the supplier immediately.

2.3 Electrical Requirements

The QMA401 accepts a power supply of the following specification:

Voltage	85…264 V AC
Frequency	47…63 Hz
Power Consumption	150 VA

Fuse

This product is provided with an internally mounted fuse. A replacement fuse can be obtained by contacting Michell Instruments' technical support. Fuse rating = 5 x 20 mm 2.5 A H 250 V Slo-Blow to IEC 60127-2.

Power Connection

The product is provided with an IEC C13 socket on the rear panel for mains power input.

The QMA401 is supplied with a 2-m IEC cable. The IEC socket is on the rear right-hand side of the instrument. There is an ON/OFF switch on the mains power input socket. Only use an appropriately rated detachable mains supply cord.

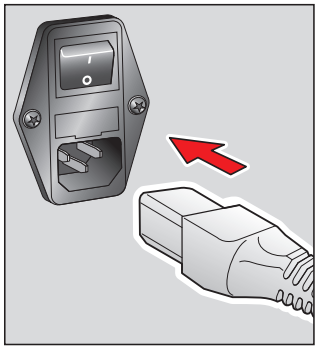

Figure 3 *Power Connection*

Alarm outputs comprise four sets of changeover relay contacts: one set for INTERNAL FAULTS, and three sets for PROCESS alarms. All contacts are rated at 24 V, 1A. **NOTE: This rating must not be exceeded.**

Equipment Ratings

This product is designed to be safe, at least under the following conditions: between a temperature range of -40…+60 °C (-40…+148 °F), in maximum 80 % relative humidity for temperatures up to +31°C (88 °F) decreasing linearly to 50 %rh at 50 °C (+122 °F). Overvoltage Category II. Pollution Degree 2. Altitudes up to 2000 m. Indoor use only.

See Appendix A, Technical Specification, for full operating parameters.

2.4 Rear Panel Connections

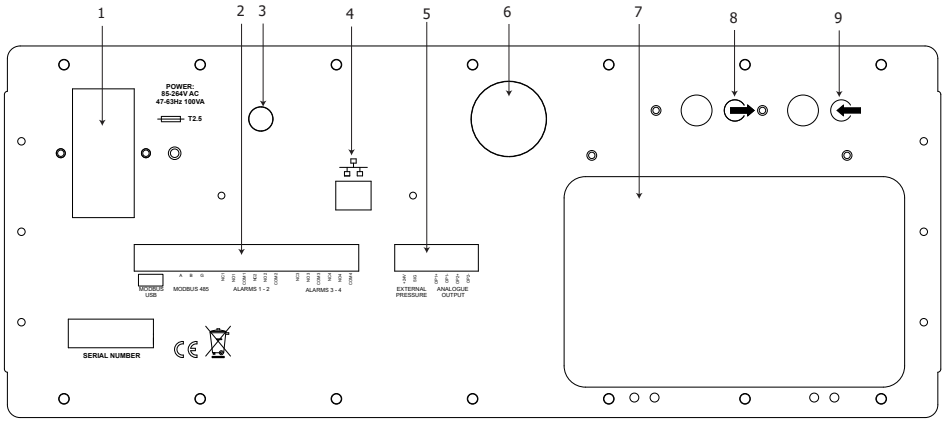

1	Power Connection	IEC Power Socket, On/Off Switch & Fuse		
2	Electrical Connections #1	USB		
		RS485 (Modbus)	A	
			B	
			G	
		Alarms 1 & 2	NC1	
			NO1	
			COM1	
			NC2	
			NO2	
			COM2	
		Alarms 3 & 4	NC3	Analyzer Status Alarm NO in warning/fault condition NC no warning / no fault
			NO3	
			COM3	
			NC4	
			NO4	
			COM4	
		Alarm relays: SPDT Form C suitable for signal circuits 24 V DC 1A		
3	Bypass Flow Adjustment			
4	Ethernet			
5	Electrical Connections #2	External Pressure	+24 V	
			Signal	
		Analog Output	OP1+	
			OP1-	
			OP2+	
			OP2-	
6	Inlet Pressure Control			
7	Dryer Module Access Panel			
8	Gas Outlet			
9	Gas Inlet			

Figure 4 *Rear Panel Connections*

2.5 Pressure Safety

WARNING:

This product is used in conjunction with pressurized gases. Observe pressurized gas handling precautions.

WARNING:

Pressurized gas is dangerous and should only handled by suitably trained personnel.

DO NOT permit pressures greater than the specified safe working pressure to be applied directly to the instrument.

For the calibration to remain valid the QMA401 must be operated at the pressures specified on the calibration certificate (typically a sample pressure of 1 barg (14.5 psig), with the outlet at atmospheric pressure). When using the pressure control option, the cell pressure should never exceed the maximum stipulated operating pressure of 1 barg (14.5 psig).

2.6 Connection of Gas Supplies

Sample gas connections are made via the gas inlet and outlet 1/4" VCR ports located on the rear panel of the instrument as shown in *Figure 5*. All connections should be made with high quality stainless steel tubing.

NOTE: No external gas couplings are supplied with the analyzer but can be ordered as an accessory by contacting Michell Instruments – see www.michell.com for contact details.

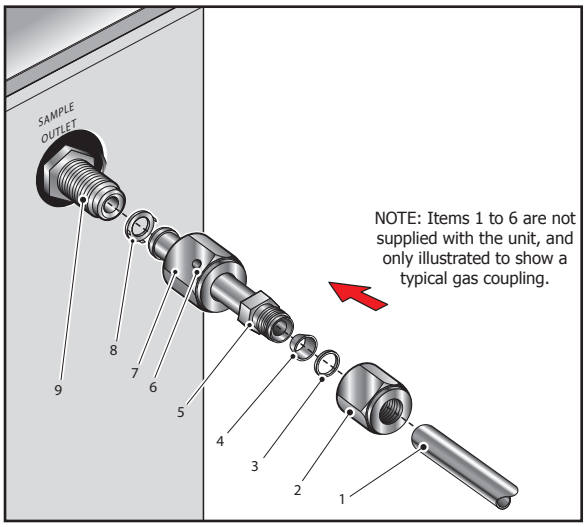

Figure 5 *Typical Gas Connections*

Making a connection to the 1/4" VCR fitting:

1. Clip the gasket and its retaining ring (8) over the end of the VCR adaptor (5).
2. Locate the end of the VCR adaptor (5), fitted with the gasket (8) over the VCR port (9) and screw the locking nut (7) finger tight to fix the adaptor to the port.
3. Tighten the locking nut (7) one eighth of a turn.

Connection to a VCR to 1/4" Swagelok tube adaptor:
(available as an accessory)

1. Cut ¼" stainless steel tubing (1) to the correct length and, if necessary, bend to shape to suit the location of the instrument. **NOTE: To facilitate ease of connection to the adaptor (5), at least 75 mm (3 in) of the tubing coming out of the adaptor must be straight.**
2. Clean off any burrs or metal shavings adhering to the tubing.
3. Pass the tubing (1) through the locking nut (2), and the back ferrule (3).
4. Place the front ferrule (4) over the stainless steel tubing (1), bevelled end towards the adaptor (5).
5. Insert the stainless steel tubing (1) as far as it will go into the adaptor (5) and tighten up the locking nut (2) finger tight.
6. Hold the adaptor (5) flats with a spanner and tighten up the locking nut (2). This action compresses the front ferrule (4) and back ferrule (3) onto the tubing to form a gas tight seal. **Caution: Do not overtighten as this could cause the ferrules to crack and destroy the integrity of the seal**.

The couplings can be checked for leaks by pressurizing the system (by connecting the sample line to the process) and introducing a proprietary leak test solution into each of the test ports (6) located on the locking nut (7). If a stream of bubbles is produced then the gasket seal is leaking. If no bubbles are produced, the seal is gas tight.

If a leak is detected, tighten up the locking nut (7) a little more until the leak stops. If the leak cannot be stopped by tightening the coupling, unscrew the locking nut (7), and remove the coupling from the instrument.

Examine the ends of the coupling to check that the surfaces are not damaged and then fit a new gasket (8), re-connect and re-test.

3 OPERATION

This section describes both the general operation of the analyzer and the method of setting-up and changing the default parameters if this should become necessary.

Prior to operation, the instrument must have been connected to the correct electrical power supply and the relevant analog and alarm outputs connected to external systems as required and as described in Section 2. The instrument must also have been installed as detailed in Section 2 and connected to a sample gas supply that is representative of the monitored process.

3.1 General Operational Information

Operation of the QMA401 Trace Moisture Analyzer is completely automated and once setup requires little operator intervention besides routine maintenance.

3.2 First Time Operation

When the instrument is switched on an Initializing overlay will be shown while the menu system loads.

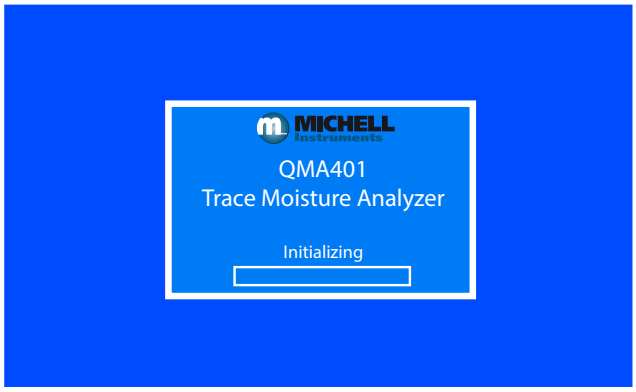

Figure 6 *Initializing Overlay*

After initialization is complete, the following display will appear.

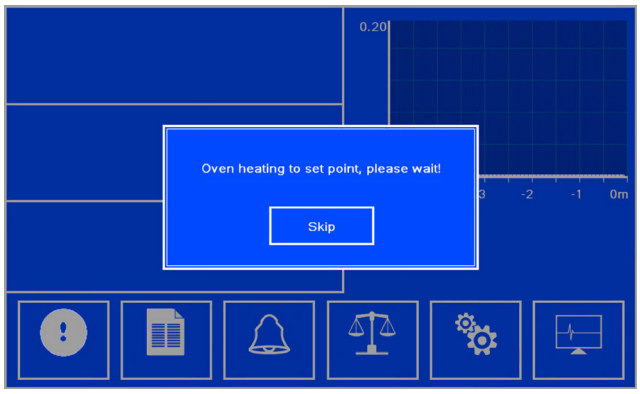

Figure 7 *Display During Heating Period*

The heating period lasts about an hour, allowing time for the internal sampling system to purged with the sample gas.

3.2.1 Regulating Sensor Pressure

The sensor pressure of the QMA401 must match the pressure stated on the calibration certificate in order for the calibration to be valid.

To control the sensor pressure, a pressure regulator is required on the input of the analyzer.

An integral pressure regulator (rated to 300 barg input pressure) can be supplied as an option at time of order. Otherwise, when choosing an external pressure regulator, select one designed for use in high purity gas, with a stainless steel body and diaphragm to minimize impact on sample response speed when measuring dry samples.

To set the input pressure:

1. Power the analyzer on and wait for the oven to heat up before proceeding.
2. Navigate to the Monitor Screen. **Sensor pressure** shows the actual pressure seen by the cell.
3. Use the pressure regulator to adjust the **Sensor pressure** to match the pressure shown on your calibration certificate.

   NOTE: The pressure at the outlet should be atmospheric, unless otherwise stated on the calibration certificate.

4. Familiarize yourself with the menu system of the analyzer, and setup the parameters listed in the next section. Before a measurement is made, ensure the correct carrier gas has been selected in the menu system.

3.2.2 Analyzer Setup

During the period when the oven is heating to set point, all functions except for HMI adjustments are disabled until the oven has reached its operating temperature. During this time, the carrier gas setting needs to be configured correctly for the gas being measured. A number of presets are available for single gas types – if the intended sample is a mixture of gas components then the gas conversion factor needs to be calculated according to the instructions in Appendix B.

- Temperature and pressure units
- Pressure input
- Alarm configuration
- Analog output configuration
- Field calibration parameters
- Real time clock

Upon completion of oven heating the Main Screen will appear showing the default parameters and units (example shown below).

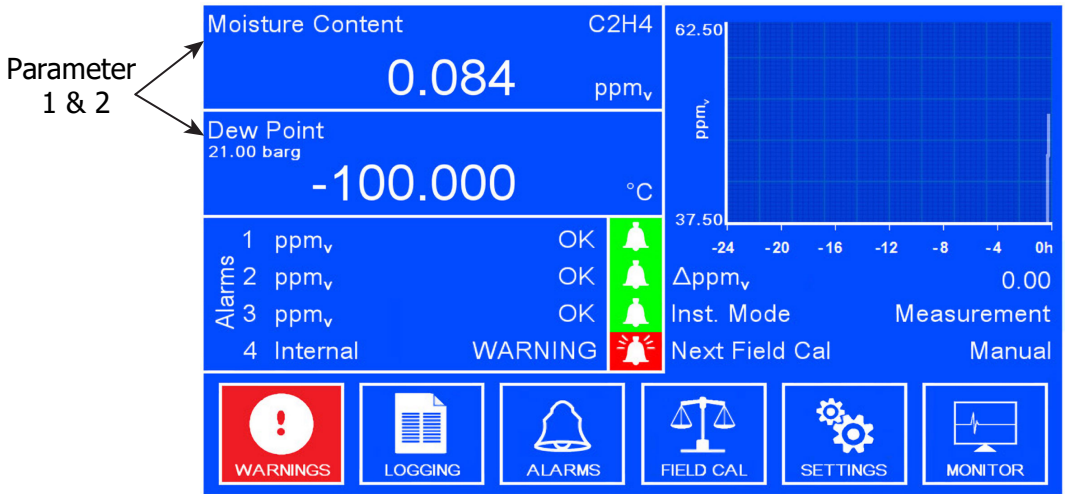

Figure 8 *Typical Display*

Using the inlet pressure regulator adjust the sample pressure until the reading on the internal sensor pressure readout on the Monitor page matches the value on the calibration certificate. The pressure at the outlet should be atmospheric unless otherwise stated on the calibration certificate.

3.3 Menu Structure

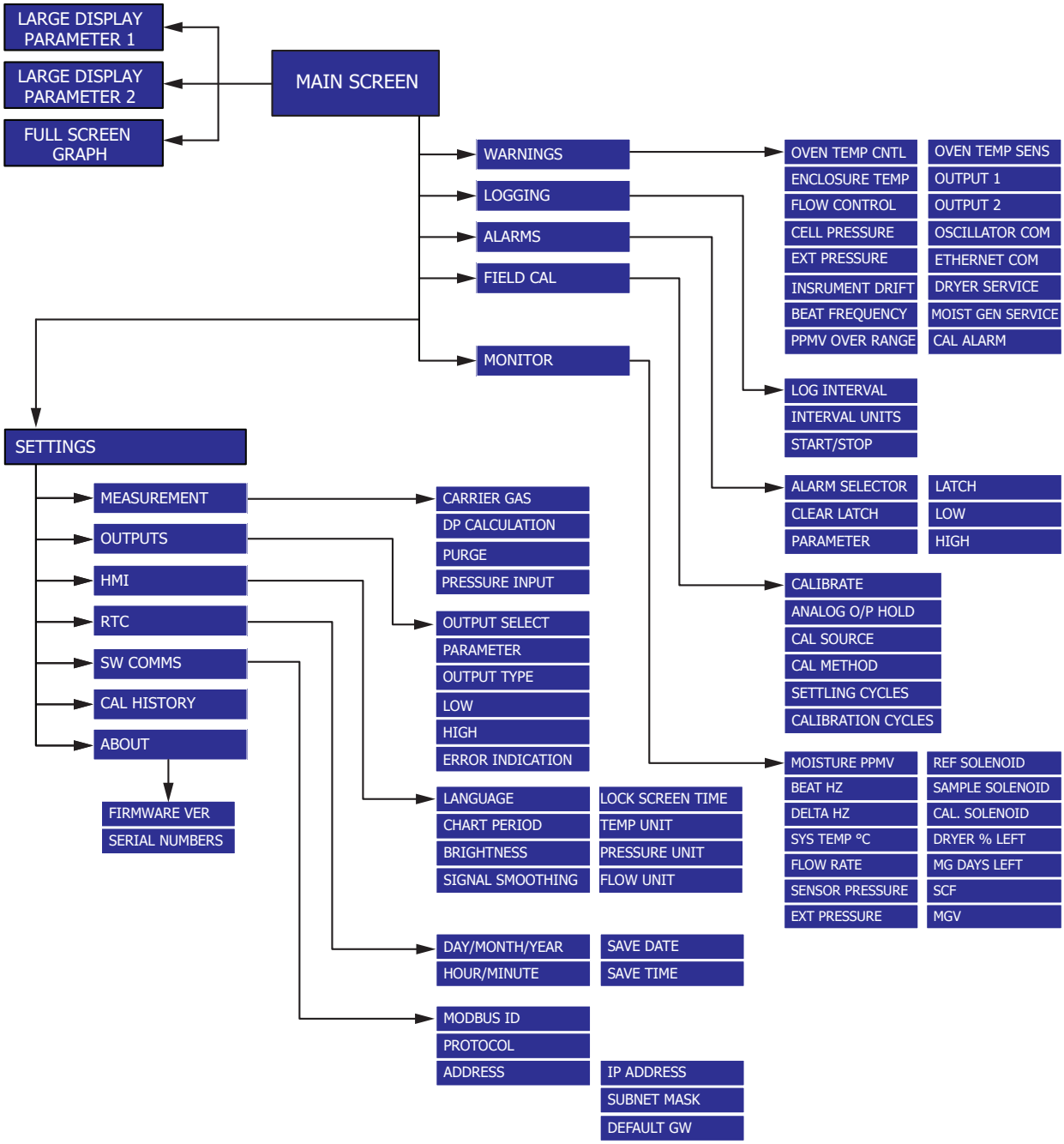

Figure 9 *Menu Structure*

3.4 Description of Measured Parameters

Moisture content ppm_v	Parts per million of H_2O by volume
Moisture content ppm_w	Parts per million of H_2O by weight
Moisture content m °F³	Milligrams H_2O per cubic meter gas
Water Vapor Pressure Pa	Water vapor pressure in pascals
lbs/MMscf	Pounds H_2O per million standard cubic feet
Frost Point	Frost point temperature of either ideal or natural gas depending on options set on measurement screen
Oven Temperature	Temperature of the internal oven
Flow	Gas flow rate
Cell Pressure	Pressure measured by the internal pressure transducer
Ext. Pressure	Pressure measured by an external pressure transducer (if fitted)

3.5 Main Screen

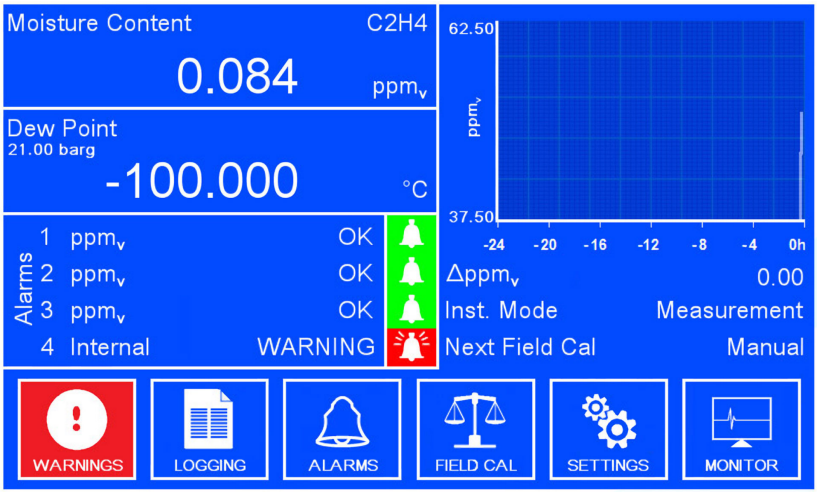

Figure 10 *Main Screen*

Parameter	Description
Parameter 1 & 2	Live reading of the selected display parameters.
Graph	Live graph reading of parameter 1.
Alarm 1, 2 & 3	The current state of the alarms. **Possible alarm states:** **Low** – Alarm type is set to Low, and has been triggered because the selected parameter is below the threshold value. **OK** – Alarm has not been triggered. **High** – Alarm type is set to High, and has been triggered because the selected parameter is above the threshold value. **Trip** – Alarm has been triggered previously, the selected parameter then fell back within acceptable limits.
Alarm 4 Internal	Analyzer Status Alarm Relay Activated for warning/fault Selection set in Modbus Register 9 (see appendix D)
Warnings	Internal warning alarms. **Possible alarm states:** **OK, WARNING**
Graph Delta	Shown as ΔX (where X=the currently selected primary measurement parameter) – Displays the difference between the minimum and maximum graph measurements.
Instrument Mode	Displays the current instrument mode. **Possible instrument modes:** **Measure** – The QMA401 is performing a measurement cycle **Cal Internal** – The QMA401 is performing a self-calibration using the internal reference **Cal External** – The QMA401 is performing a self-calibration using an external reference **Heating** – The oven is still heating to the set-point temperature
Oven Temperature/Next Mode	Displays the countdown to the next mode. If the QMA401 is in warm up mode this parameter is replaced with a live oven temperature reading.

Table 1 Main Screen Parameters

3.5.1 Large Display Mode

To access large display mode, press and hold on the measurement parameter to be enlarged.

To return to the Main Screen, touch anywhere on the screen.

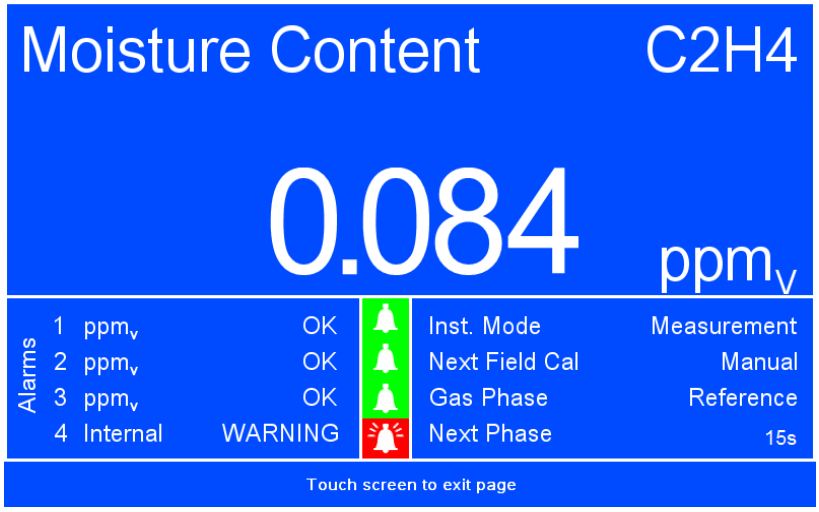

Figure 11 *Large Display Mode*

3.5.2 Full Screen Graph

Displays a full screen graph of Parameter 1.

To access the full screen graph, press the graph area of the Main Screen.

To return to the Main Screen, touch anywhere on the screen.

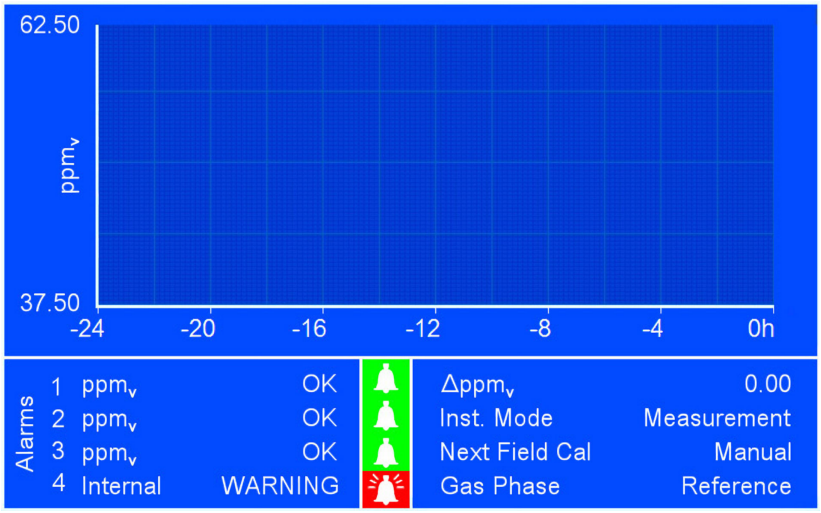

Figure 12 *Full Screen Graph*

3.6 Main Screen Sub Menus

The following sub menus can be accessed from the Main Screen:

- Warnings
- Logging
- Alarms
- Field Cal
- Settings
- Monitor

3.6.1 Warning Screen

The buttons on this screen are used to toggle the internal alarms on/off. When an individual alarm is disabled it will not trigger the internal alarm.

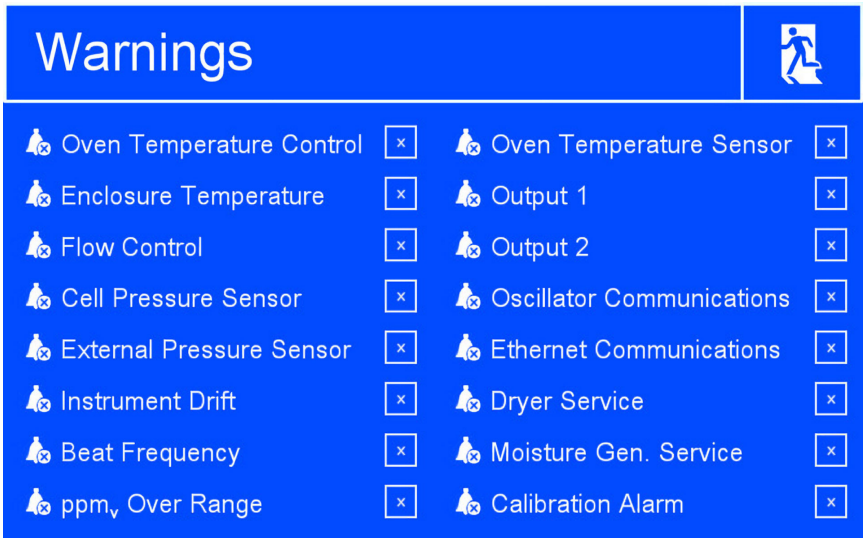

Figure 13 *Status Screen*

Displays the state of the internal alarm associated with each of the parameters above, indicated by the following icons:

Value	Description
Off	Alarm disabled
On	Alarm enabled. No fault
ON	Alarm enabled. Fault condition

3.6.2 Logging Screen

Controls logging to the SD card.

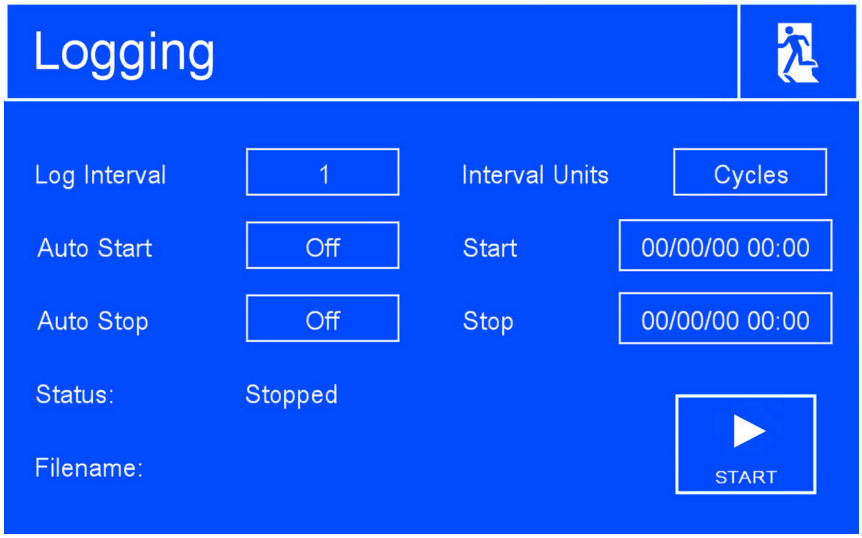

Figure 14 *Logging Screen*

Parameter	Description
Log Interval	Frequency of recording data to the log file
Interval Units	**Available Options:** Cycles, Seconds
Status	Displays status information related to logging, e.g. SD card full
Filename	Automatically generated filename based on current time and date

The SD card should be formatted as FAT32.

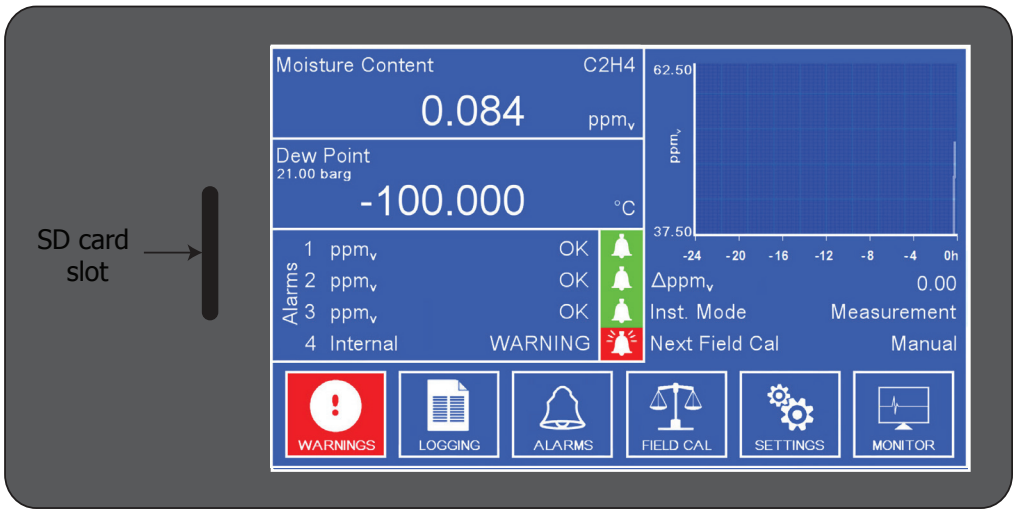

Figure 15 *Front Panel*

3.6.3 Alarm Screen

Figure 16 *Alarm Screen*

Parameter	Description
Alarm Selector	The left and right arrow keys are used to toggle through the different alarms available. **Available Options:** Alarm 1, Alarm 2, Alarm 3, Alarm 4 – Analyzer Status Alarm only
Clear Latch	Clears a latched alarm. **Available Options:** Yes, Cleared
Parameter	Selects the parameter for the corresponding alarm. **Available Options:** Moisture Content ppm_V Moisture Content ppm_W Moisture Content mg/m^3 Water Vapor Pressure Pa Moisture Content lbs/MMscf Frost Point Oven Temperature Flow ml/min Cell Pressure External Pressure
Low	Selects the lower alarm limit for the corresponding alarm using the keypad which is opened.
Latch	Selects between latched and non-latched alarms. **Available Options:** On, Off
High	Selects the higher alarm limit for the corresponding alarm using the keypad which is opened.

Table 2 Alarm Screen Parameters

3.6.4 Field Calibration Screen

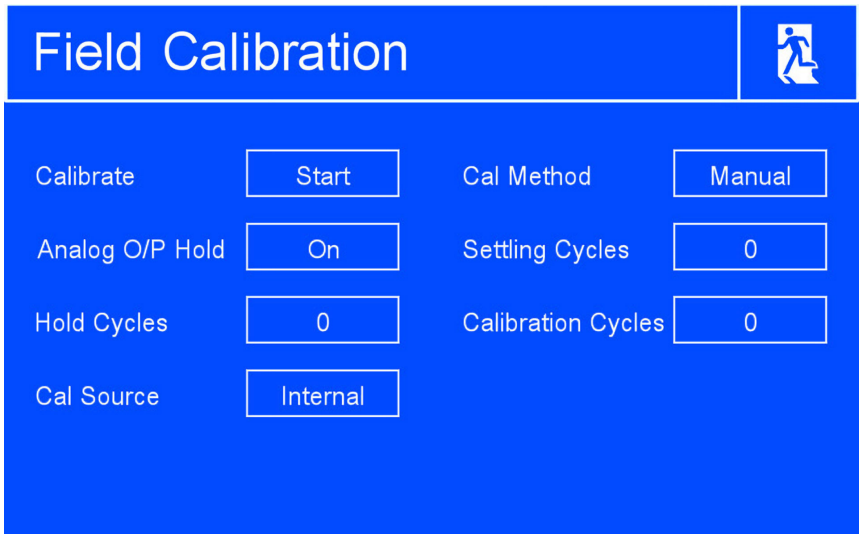

Figure 17 *Field Calibration Screen*

Parameter	Description
Calibrate	Starts a calibration procedure if a manual calibration has been selected.
Analog O/P Hold	Toggles data hold mode. This determines whether the last valid measurement is held while a calibration is carried out. **Available Options:** On, Off
	If data hold is selected, the user can select how many cycles, after the calibration, the last measured value is held for.
Cal Source	Toggles between an external calibration source or the internal calibration source. If an external calibration source is selected the external reference moisture must be entered in the ext ref setting. **Available Options:** External, Internal
	External Cal Source – when this is chosen **Ext Ref** will need to be entered to show the ppm_v value of the external moisture reference.
	Internal Cal Source – when this is chosen then the Cal Method can be set to Manual or Automatic.

Table 3 Calibration Screen Parameters

Parameter	Description	
Cal Method	Toggles between manual calibration or automatic calibration mode. **Available Options:** Automatic, Manual	
	Manual Cal Method – if this is chosen the Start button must be pressed in order to initiate the calibration procedure. If this method is chosen then both the Interval and Hour selection boxes are hidden and a Start button is displayed.	
	Automatic Cal Method – if this is chosen then the following parameters will need to be set and will be displayed on the screen. Calibration will begin on the time selected using the interval and hour settings.	
	Interval (Days)	Frequency of automatic calibrations in days.
	Hour	The hour in the day at which an automatic calibration will start.
	Settling Cycles	Period of time for the QMA401 to stabilize to the new moisture level (as presented by the internal moisture generator or external ppm value) before conducting the actual calibration cycles.
	Cal Cycles	Sets how many calibration cycles are carried out.

Table 3 Calibration Screen Parameters (cont.)

If Analog O/P Hold is turned off then the 'Hold Cycles' selection box is hidden, as shown below:

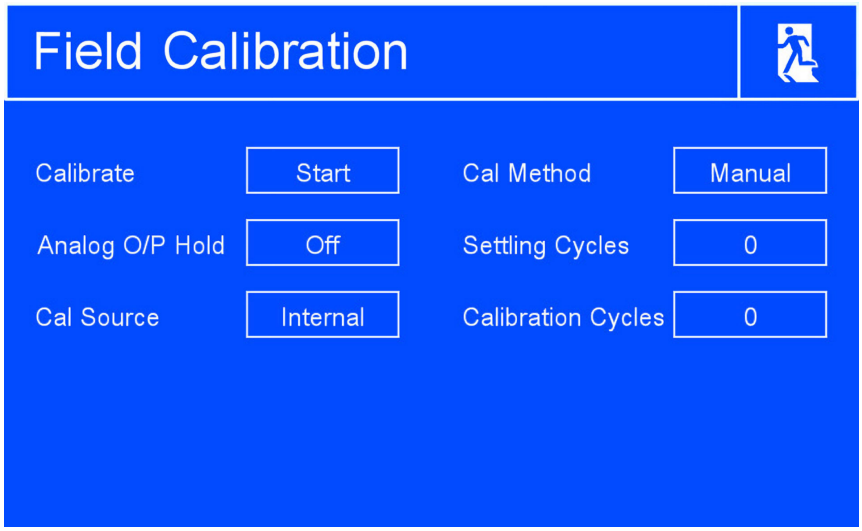

Figure 18 *Field Calibration Screen 2*

Hold Cycles – If Analog O/P Hold is selected, the user can select for how many cycles after the calibration the last measured value is held for. This is done using the onscreen keypad which is opened.

If an external calibration source is selected the user must enter the external reference moisture in the Ext Ref (ppm) setting.

If an internal calibration source is selected then the 'Ext Ref' selection box is hidden (as shown above). If an external calibration is selected then the calibration mode is forced to manual i.e. an automatic calibration cannot be carried out if the external calibration source is active. The 'Cal Method' selection box is also hidden, as shown below:

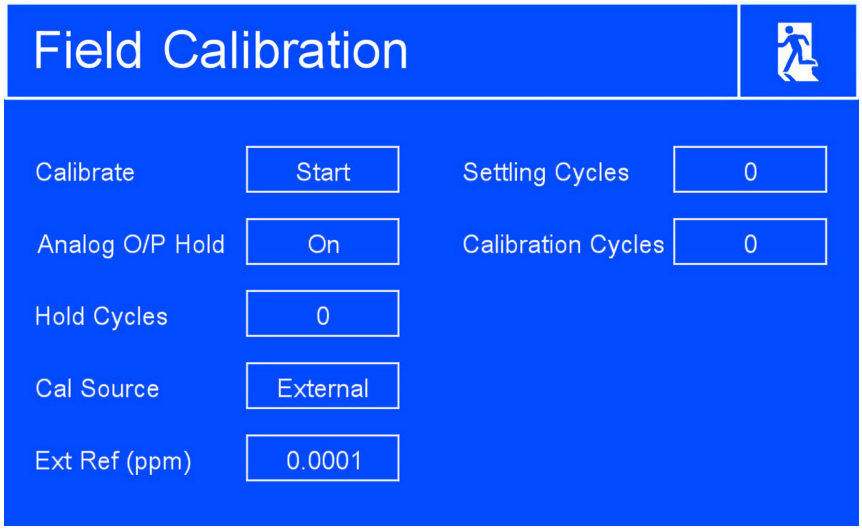

Figure 19 *Field Calibration Screen 3*

If an automatic calibration is selected then calibration will begin on the time selected using the interval and hour settings. This is done using the onscreen keypad which is opened.

If a manual calibration is selected then both the 'Interval' and 'Hour' selection boxes are hidden, as shown above. If an automatic calibration is selected then the "Calibrate", "Cal Source" and "Ext Ref" selection boxes are hidden, as shown below:

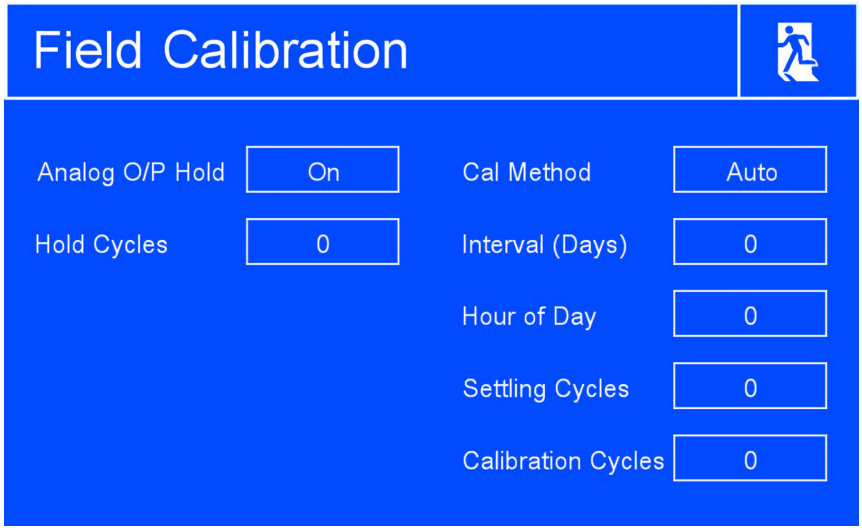

Figure 20 *Field Calibration Screen 4*

- Interval (Days) – This is where the user selects how often in days a calibration is performed.
- Hour of Day – This is where the user selects the hour within the day at which the calibration will occur.

- Cal Cycles – This is where the user selects how many calibration cycles are carried out.
- Settling Cycles – This is where the user selects how many settling cycles are added after the calibration.

NB. If a manual calibration has been started the page will hide all the parameter and instead show the calibration and settling cycle countdown. This can be seen below:

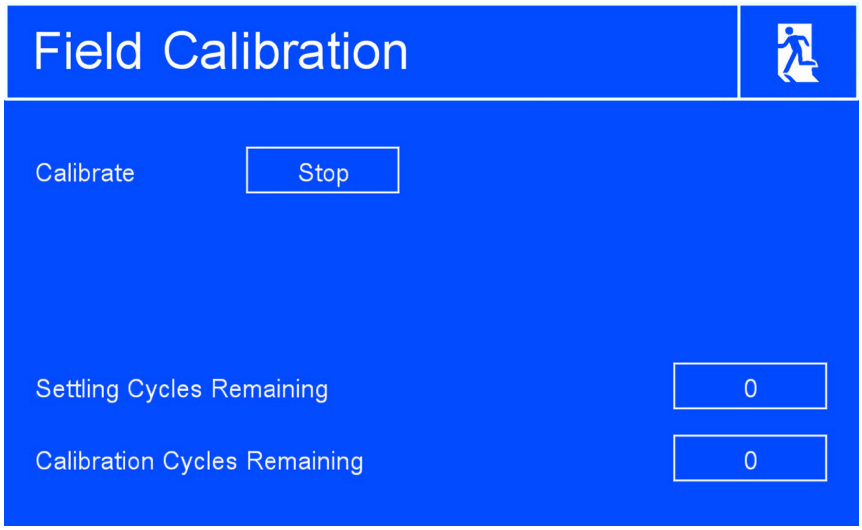

Figure 21 *Field Calibration Screen 5*

3.6.5 Monitor Screen

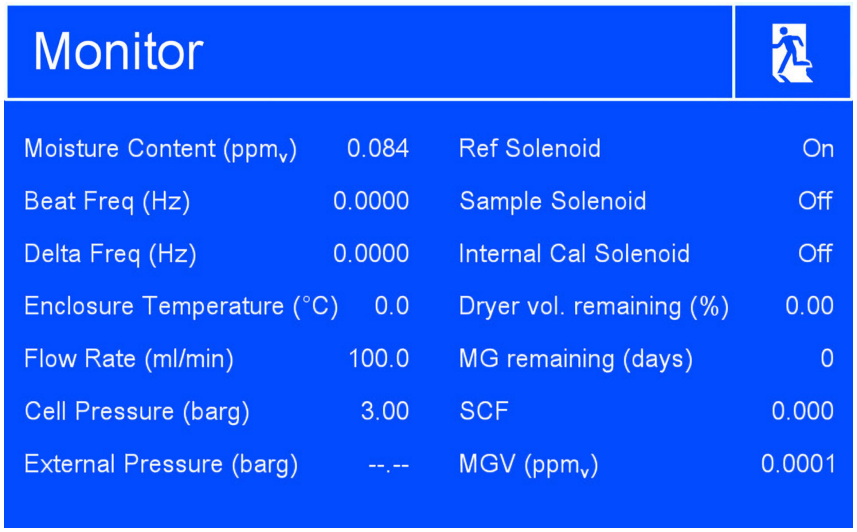

Figure 22 *Monitor Screen*

Parameter	Description
Moisture Content (ppm_v)	Live moisture reading in ppm_v
Beat Frequency	Live beat frequency reading: the frequency difference between the two crystals.
Delta Frequency	Live delta frequency reading: the frequency difference between the sample and reference phase.
Enclosure Temperature (ºC)	Live system temperature.
Flow Rate (ml/min)	Live flow rate reading in ml/min.
Cell pressure (barg)	Live internal pressure transducer reading.
Ext. pressure (barg)	Live process pressure reading.
Ref Solenoid	Displays the reference solenoid state.
Sample Solenoid	Displays the sample solenoid state.
Internal Cal Solenoid	Displays the internal calibration solenoid state.
Dryer vol. remaining %	Remaining dryer life in %.
MG remaining (days)	Remaining MG life in days.
SCF	Sensor correction factor set during the last calibration cycle.
MGV	Moisture Generator value.

Table 4 Monitor Screen Parameters

3.7 Settings Menu

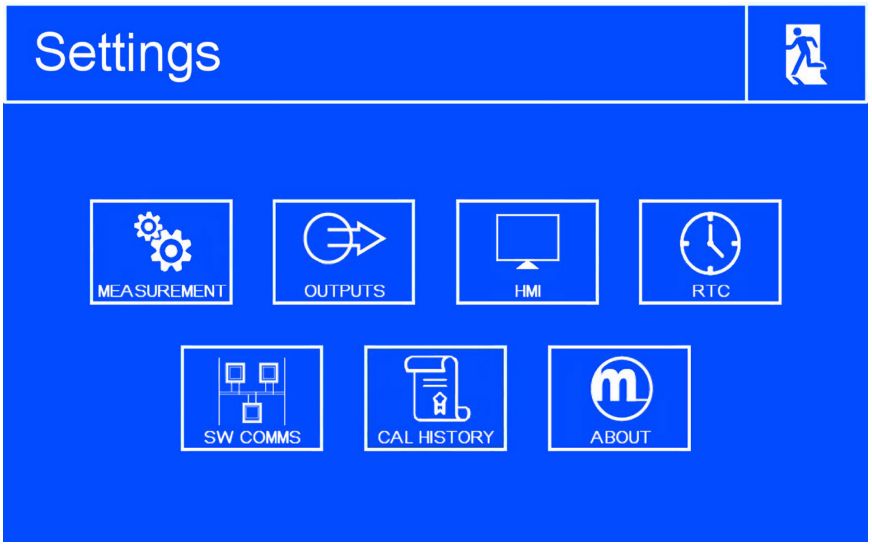

Figure 23 *Settings Menu Screen*

Allows access to the following sub menus to change instrument settings.

- Measurement
- Outputs
- HMI
- RTC
- SW Comms
- Cal History
- About

3.7.1 Measurement Screen

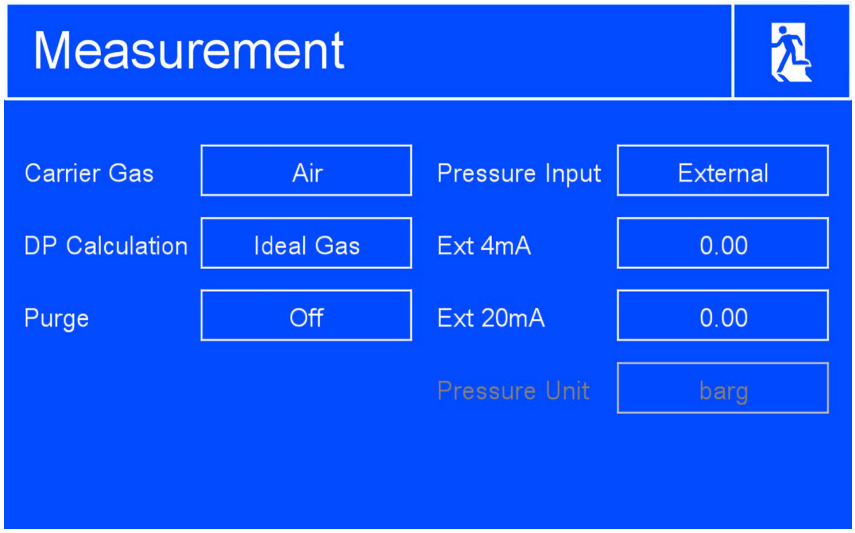

Figure 24 *Measurement Screen*

Parameter	Description
Carrier Gas	Toggles through the different carrier gas options. **Available Options:** Air, Ar, CH_4, C_2H_2, $C2H_4$, C_2H_6, C_3H_6, C_3H_8, C_4H_{10}, CO, CO_2, H_2, He, Kr, N_2, Ne, NH_3, NO, N_2O, O_2, Xe, User 1, User 2, User 3
	User Gas Entry: If a User option is chosen in Carrier Gas then this Parameter will show on the Measurement Page. See Appendix B for more information.
DP Calculation	Sets the frost point calculation method. **Available Options:** ISO (ISO 18453) Ideal Gas, IGT (IGT Bulletin #8)
Pressure Input	Selects the pressure source. **Available Options:** **Atmos** – Atmospheric pressure. **Fixed** – User-settable fixed value. When the Fixed option is chosen it enables a fixed value to be entered. **External** – An externally connected pressure transducer. When the External option is chosen it enables the choice of the zero and span range pressure transducer values of 4 or 20 mA.
Purge Feature	This enables or disables the purge function, see section 3.7.1.3 below.

Table 5 Measurement Screen Parameters

3.7.1.1 Carrier Gas

Used to select a different carrier gas. When the user presses this box the page below is opened.

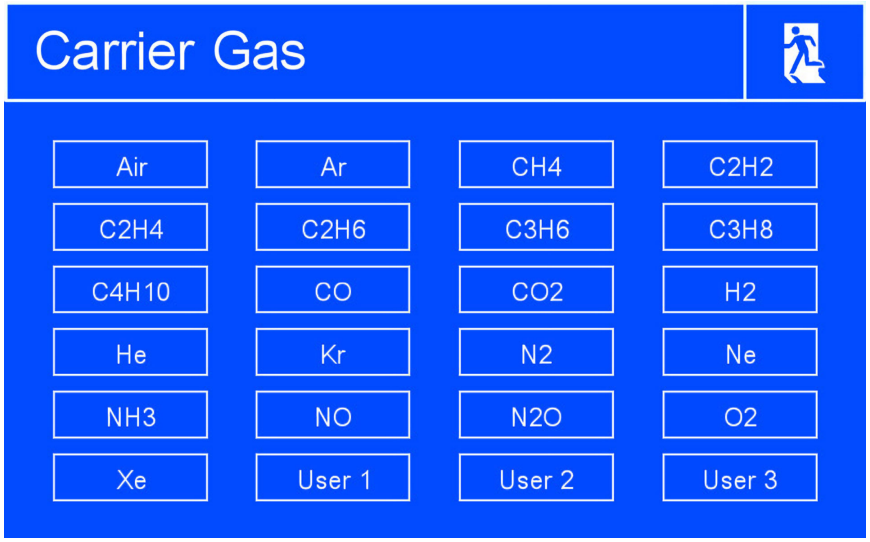

Figure 25 *Carrier Gas Screen*

There are 20 different preset gases the user can choose from, along with 3 user-definable presets:

- Air
- Argon
- Methane
- Acetylene
- Ethylene
- Ethane
- Propane
- Butane
- Propene
- Carbon Monoxide
- Carbon Dioxide
- Nitrogen
- Hydrogen
- Helium
- Neon
- Krypton
- Ammonia
- Nitric Oxide
- Nitrous Oxide
- Oxygen
- Xenon
- User 1
- User 2
- User 3

After selecting the gas, the user is taken back to the previous page.

CAUTION:
Some gases may be potentially explosive. Ensure product is fully purged by the sample gas before energizing.

When using the product in conjunction with potentially explosive gases: 1) The product should only be operated by suitably trained personnel. 2) A leak check of the inlet and outlet port connections must be undertaken prior to powering on the product. 3) The sample gas outlet stream must be suitably – and leak free – piped to an environment where it can be safely vented. 4) The location of operation of the product must be in a suitably ventilated area to ensure that, should leakage occur, gases will at all times remain below their LEL.

NB. If User 1, 2 or 3 is selected as the carrier gas then a new parameter box will appear underneath the carrier gas toggle box called 'User Gas Entry'. This can be seen below.

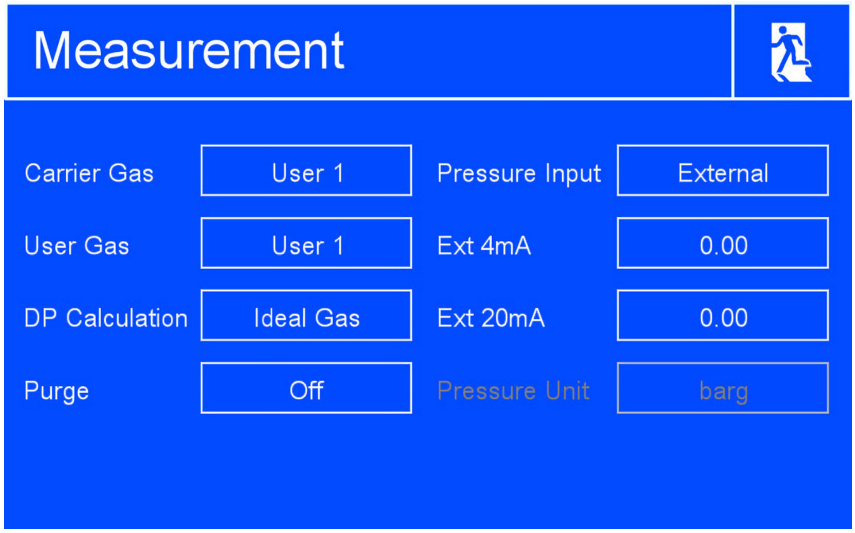

Figure 26 *Measurement Screen*

When the User Gas option is selected from the carrier gas list, the user can enter the user gas settings, using the User Gas Setup page which is opened. See Appendix B for further information on calculating User Flow Correction Factors.

3.7.1.2 DP Calculation Method

Selects the calculation method used for dew point and lbs/MMscf. Options are:

- IGT – as per IGT Bulletin #8
- ISO – as per ISO18453
- Ideal Gas

3.7.1.3 Purge

The purge feature will allow the user to purge the sensor crystals with high flow dry gas quickly – this is a flush through/cleaning process for the internal gas path if switching gas or wishing to disconnect any service items to ensure they are clean. This is done by energising the reference solenoid and de-energising both the calibration and sample solenoids. The flow control through the MFC is also increased up to 400 ml/min from 100 ml/min. These two actions allow the dry gas to flow through the sensor block. During this time the heating control in the oven may be compromised due to the increased power consumption of the solenoid. If this happens it can take roughly 20 minutes to cool down to its set point of within 60 °C ±0.05 °C for a period of at least 15 minutes.

3.7.2 Pressure Input

Selects the pressure source. Options are:

- Atmos.
- Fixed
- External

If the external option is selected the 'Fixed' selection box is hidden and replaced with the 'Ext. 4 mA' and 'Ext. 20 mA' selection boxes as shown below:

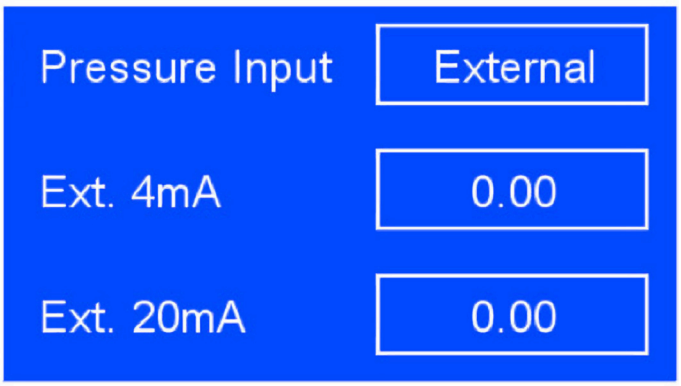

Figure 27 *External Options*

If the fixed option is selected the 'Ext. 4 mA' and 'Ext. 20 mA' selection boxes are hidden and replaced with the 'Fixed' selection box as shown below:

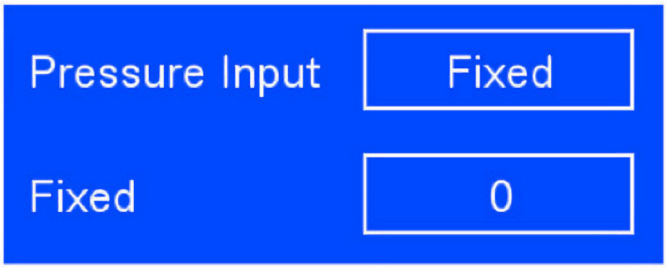

Figure 28 *Fixed Options*

If the 'Atmos.' option is selected the 'Fixed', 'Ext. 4 mA' and 'Ext. 20 mA' selection boxes are all hidden as shown below:

Figure 29 *Atmos. Option*

- Fixed – Allows the user to enter the fixed pressure using the onscreen keypad.
- Ext. 4 mA – Allows the user to enter the pressure at 4 mA using the onscreen keypad.
- Ext. 20 mA – Allows the user to enter the pressure at 20 mA using the onscreen keypad.
- Pressure Unit –This displays the current Pressure unit. Please note this cannot be changed on this page.

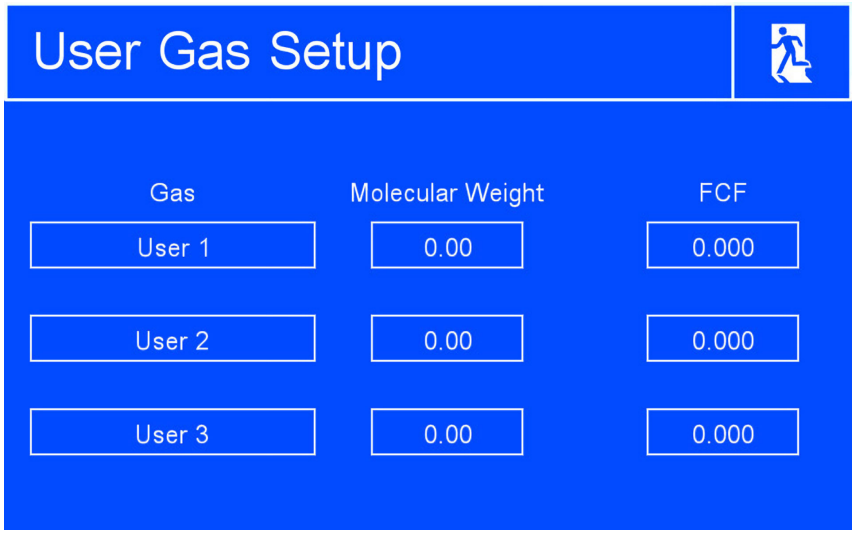

Figure 30 *User Gas Setup Screen*

- Gas – Allows the user to enter a unique name for the gas using the onscreen keypad.
- Molecular Weight – Allows the user to enter the molecular weight of the gas using the onscreen keypad.
- FCF – Allows the user to enter the Flow Correction Factor using the onscreen keypad. See Appendix B for instruction on how to calculate the FCF.

3.7.3 Outputs Screen

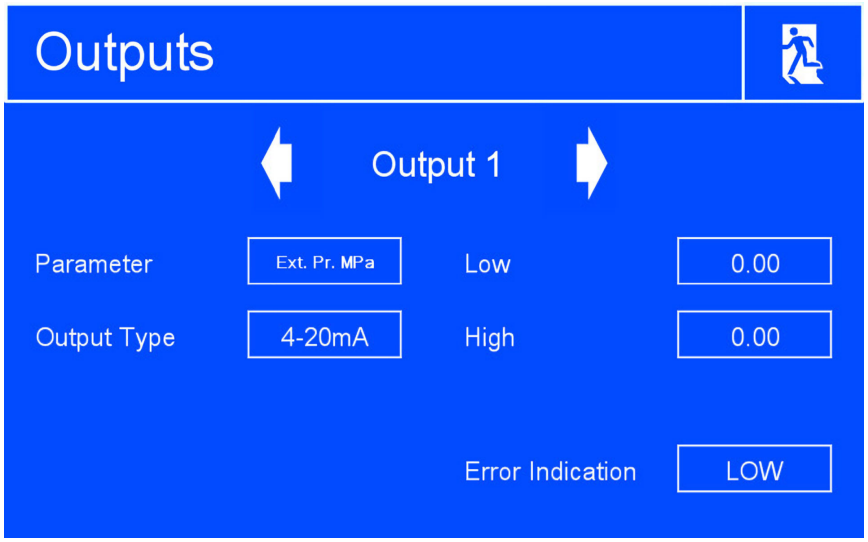

Figure 31 *Outputs Screen*

Parameter	Description
Output Selector	Selects output required. **Available Options:** Output 1, Output 2
Parameter	Toggles through the different output parameters. **Available Options:** Oven °C, ml/min, Cell Pr. barg, External Pr. barg, H_2O ppm_V, H_2O ppm_W, H_2O mg/m³, WVP Pa, lbs/MMscf, DP °C
Output Type	Toggles the signal type of the output. **Available Options:** 1…5 V, 4...20 mA
Min	Selects the lower output limit for the corresponding output.
Max	Selects the higher output limit for the corresponding output.
Error Indication	Selects the mA error indication level for the outputs. **Available options:** 3.2 mA, 21.4 mA

Table 6 Outputs Screen Parameters

3.7.4 HMI Screen

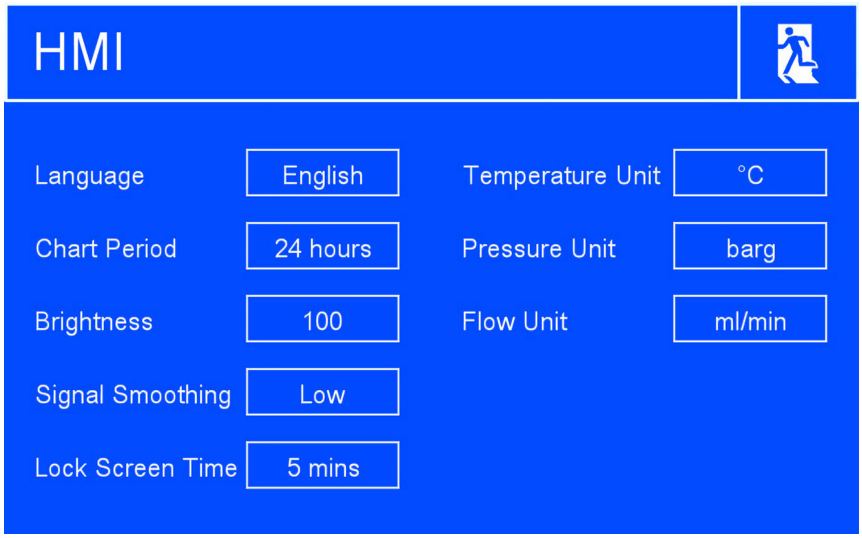

Figure 32 *HMI Screen*

Parameter	Description
Language	Toggles through the different languages available.
Chart Period	Selects the time scale of the chart. **Available Options:** 5 mins, 30 mins, 1 hr, 5 hrs, 10 hrs, 24 hrs
Brightness	Sets the screen brightness level in %. **Available Options:** 5...100%
Signal Smoothing	Select the smoothing signal level. **Available Options:** Low, medium, high
Lock Screen Time	The user can toggle through the different lock screen timeout options. **Available Options:** 5 mins, 15 mins, 30 mins, Off
Temperature Unit	Toggles through displayed temperature units. **Available Options:** °C, °F
Pressure Unit	Selects the units in which the pressure measurements are displayed. **Available Options:** barg, bara, psig, psia, MPa, mmHg
Flow Unit	Selects the flow units. **Available Options:** ml/min, sccm/min

Table 7 HMI Setup Screen Parameters

3.7.5 Real Time Clock Screen

Figure 33 *Real Time Clock Screen*

Parameter	Description
Day / Month / Year	Sets the current date for the real time clock.
Hour / Minute	Sets the current time for the real time clock.
Save Date	Saves the updated date.
Save Time	Saves the updated time.

Table 8 Real Time Clock Screen Parameters

3.7.6 Software Communications Screen

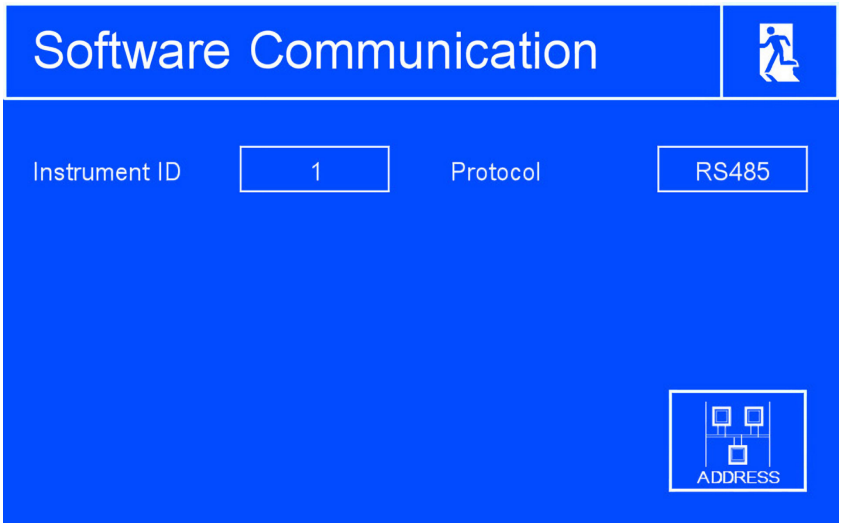

Figure 34 *Software Communications Screen*

Parameter	Description
Instrument ID	Sets the instrument address using the keypad.
Protocol	Toggles different physical layer types. **Available Options:** RS485 / USB / TCP/IP
Address	This open the Ethernet page, where the user can configure the network settings.

Table 9 Software Communications Screen Parameters

3.7.7 Ethernet Screen

Figure 35 *Ethernet Screen*

Parameter	Description
IP Address	Instrument's static IP address on the network.
Subnet mask	Subnet mask of network that the instrument is on.
Default gateway	The default gateway of the network that the instrument is on.
Apply	Applies modified settings

Table 10 Ethernet Screen Parameters

3.7.8 Field Calibration History

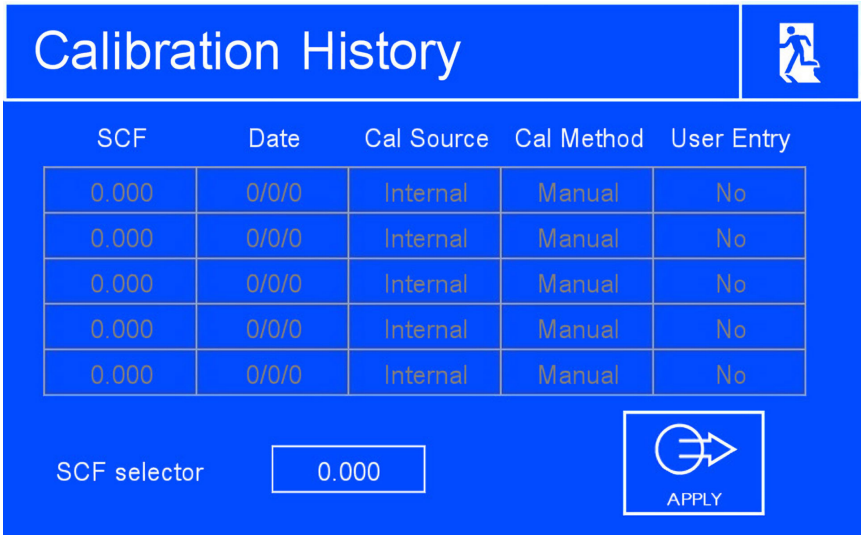

Figure 36 *Calibration History Screen*

Parameter	Description
Sensor Correction Factor (SCF) Selector	Cycles through the results of each previous calibration cycle.
Apply	Applies the SCF from the selected previous calibration cycle.

3.7.9 About Screen

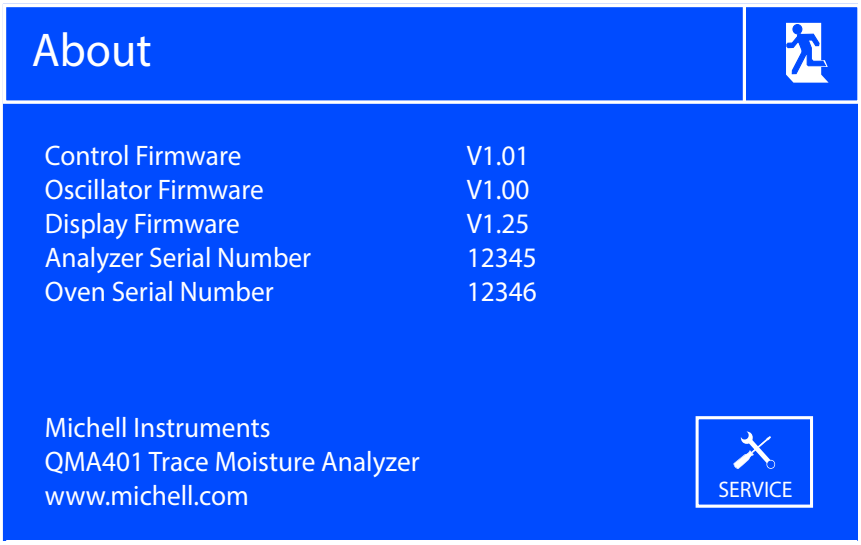

Figure 37 *About Screen*

Displays the instrument firmware versions and serial numbers.

3.8 Sampling Guidelines

The QMA401 Trace Moisture Analyzer is designed to operate in a flowing gas stream and is suitable for the measurement of the moisture content of a wide variety of gases. In general, if the gas (in conjunction with water vapor) is not corrosive to the sampling system and the sensor base metals then it will be suitable for measurement by the QMA401.

The analyzer is designed to automatically regulate the flow rate. However, the sample pressure and back pressure must match what is shown on the calibration certificate – typically 1 barg (14.5 psig) sample pressure with the oulet at atmospheric pressure, and should be controlled using a high-quality pressure regulator on the gas inlet and a back pressure regulator on the outlet.

General guidelines to be followed when setting-up a sampling system are as follows:

- **Ensure that the sample is representative of the gas under test**

To ensure that the sample is representative of the process being monitored, the sample point should be as close to the critical measurement point as possible. Also, never sample from the bottom of a pipe where entrained liquids may be drawn into the instrument's sample input line.

- **Minimize the 'dead space' in sample lines**

Dead space in sample lines causes moisture entrapment points, increased system response times or measurement errors as the trapped moisture is released into passing sample gas, producing an increase in partial vapor pressure.

Avoid the use of too many T-pieces, in-line couplings or other unnecessary pipework. Sample pipework should, ideally, be specially designed for each application rather than adapted from that previously installed for another application. Dead space in sample lines increases response time by holding water molecules which are more slowly released to the passing gas sample.

- **Remove any particulate matter or oil from the gas sample**

Particulate matter can damage the sensors. If particulate matter, such as degraded desiccant, pipe scale and rust are likely to be present in the sample gas, use a particulate in-line filter. Michell Instruments' technical sales department can be contacted for advice.

- **Use high quality sample pipe fittings**

The sample pipework must be capable of withstanding the operating pressure of the sample line. Wherever possible, always use stainless steel pipework and fittings. This is particularly important at low dew points since other materials, e.g. nylon, have hygroscopic characteristics and adsorb moisture on the tube walls, giving rise to slower measurement response and, under certain circumstances, false dew points. For temporary applications, or where stainless steel pipework is not practicable, use high quality, thick-walled PTFE piping, which exhibits similar qualities to stainless steel.

In order to maximize response time, always use the shortest run of pipework and the smallest bore possible, taking care not to induce pressure differentials by aiming for too high a flow rate through too small a bore. Michell Instruments supplies a range of precision pressure fittings suitable for use with the QMA401 instrument. Contact Michell Instruments for details of the items available.

- **Gas samples**

Generally, if the sample gas (in conjunction with water vapor) is not corrosive to base metals, it will be suitable for measurement by the QMA401 instrument. Gases containing entrained solids should be filtered before application to the instrument.

Care should be taken with gas mixtures containing potentially condensable components in addition to water vapor, e.g. oil, to ensure that only water vapor is present in the sample. Once present on the surface of the sensors, oil will not dry out and will contaminate and damage them.

- **Material of construction**

All materials are permeable to water vapor, as the water molecule is extremely small compared to the structure of solids, even when compared to the crystalline structure of metals.

Many materials contain moisture as part of their structure, particularly organic materials, salts and anything which has small pores. It is important to ensure that the materials used are suitable for the application.

If the partial water vapor pressure exerted on the outside of a compressed air line is higher than on the inside, the atmospheric water vapor will naturally push through the porous medium against a dry air water vapor pressure. Water will migrate into the pressurized air line, this effect is called transpiration.

Over a long pipe run water will inevitably migrate into any line even through the most resistant materials. Moisture on the outlet of the line will be different than on the inlet. The best material to resist transpiration is 316L stainless steel.

It is also important to note that temperature changes can increase the tendency of these materials to affect the humidity of the surrounding air. With a given surface and gas composition, increases of line pressure and decreases in temperature increase surface adsorption.

- **Pipe material surface finish**

Components with a smooth mechanical finish are always preferred. Do not confuse the term electro-polished with a mechanical polishing procedure. Electro-polishing normally is preceded by mechanical polishing to achieve the best results. If a choice of finish is available for the materials dictated by the process or sample system, select the smoothest for faster response.

- **Pipe diameter**

The larger the sampling pipe diameter, the more exposed the gas will be to the pipe wall. Therefore it is recommended to use the smallest possible pipe diameter to minimize the previously mentioned effects. This must be balance with the desired response speed. Depending on the configuration 1/8" pipe diameter is recommended. Please contact Michell Instruments if further recommendations are needed.

- **Ambient temperature variation**

The QMA401 is extremely sensitive to moisture fluctuations and ambient temperature variations will affect the equilibrium conditions. In a stable environment, the water vapor pressure within a closed system is in equilibrium with the outside ambient. If the ambient temperature increases, the energy is imparted to the gas pipes and the water molecules within the wall. This additional energy will upset the original equilibrium and the increased pressure water in the walls migrates in towards the drier gas stream.

Small molecules such as water will migrate through the pipe wall until the entire system reaches a new equilibrium. It is possible to minimize this effect on a sampling system by heat tracing sample lines and insulating/heating the sampling system enclosure to a stable temperature above the maximal ambient temperature.

It is important to control the temperature of all components of the sampling system, including regulators and lines. For this reason it is strongly advised to use heat traced line to eliminate this temperature change effect and measure moisture content solely related to the gas under test.

3.9 Measurement Cycle

At the beginning of a measurement cycle V1 is energized. This allows the dried sample gas to be routed to the sensor cell for a period of 30 seconds as shown by the red line in *Figure 25*. During this first phase of the measurement cycle the frequency difference between the sensor and reference crystals is measured (i.e. dry state).

The sample and calibration gas paths are shown in green. These lines are continually purged during the initial measurement cycle.

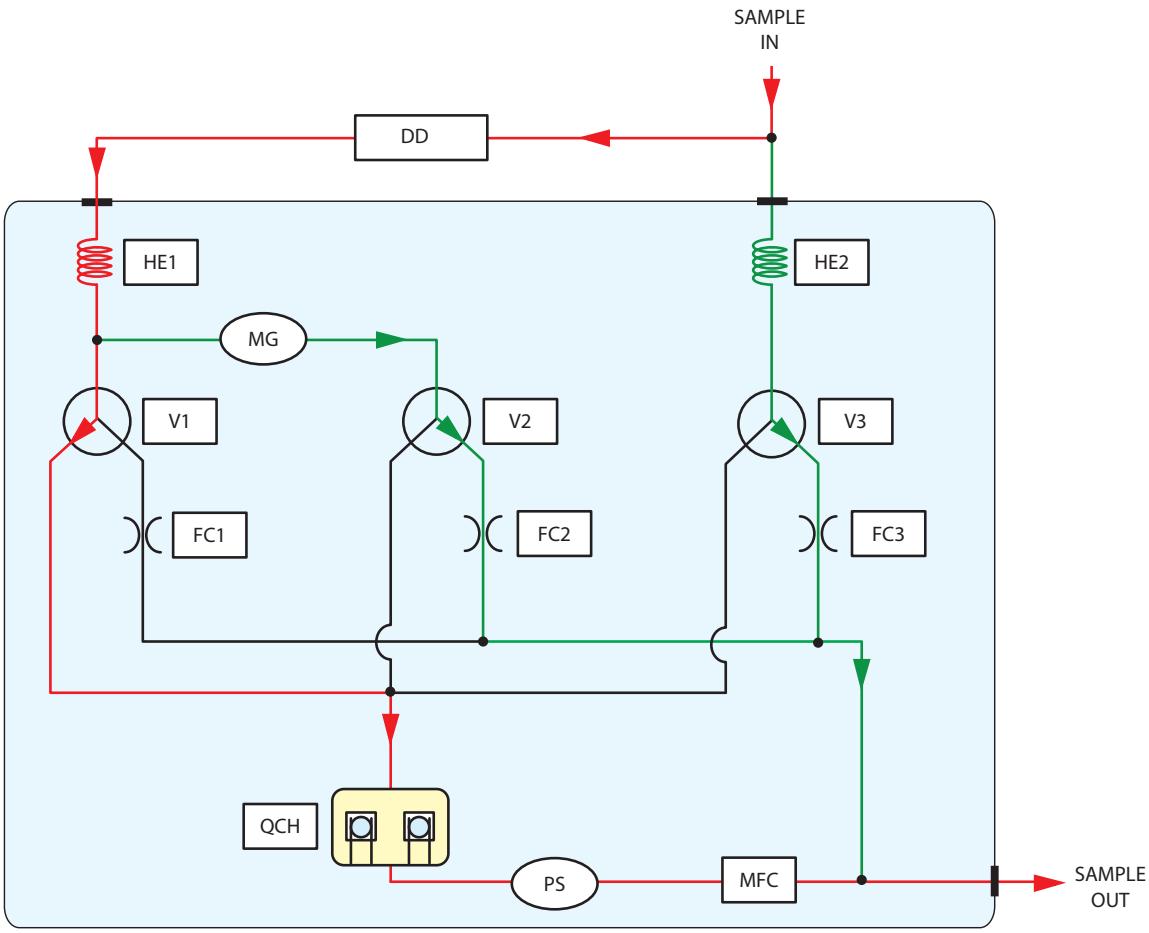

Key			
DD	Desiccant column	**MG**	Moisture generator
MFC	Mass flow controller	**V1, V2, V3**	Solenoid valves
QCH	Sensor cell	**HE1, HE2**	Heat exchanger
PS	Pressure sensor	**FC1, FC2, FC3**	Flow control

Figure 38 *Measurement Cycle (Phase 1) – Dried Sample Flow*

After a 30 second sampling period, V1 is de-energized. This cuts off the dried gas supply to the sensor cell and V3 is energized connecting the sample gas (red line – see *Figure 26)* to the sensor cell for a further period of 30 seconds. The reference and sample gas paths are shown in green. These lines are continually purged during this second phase of the measurement cycle.

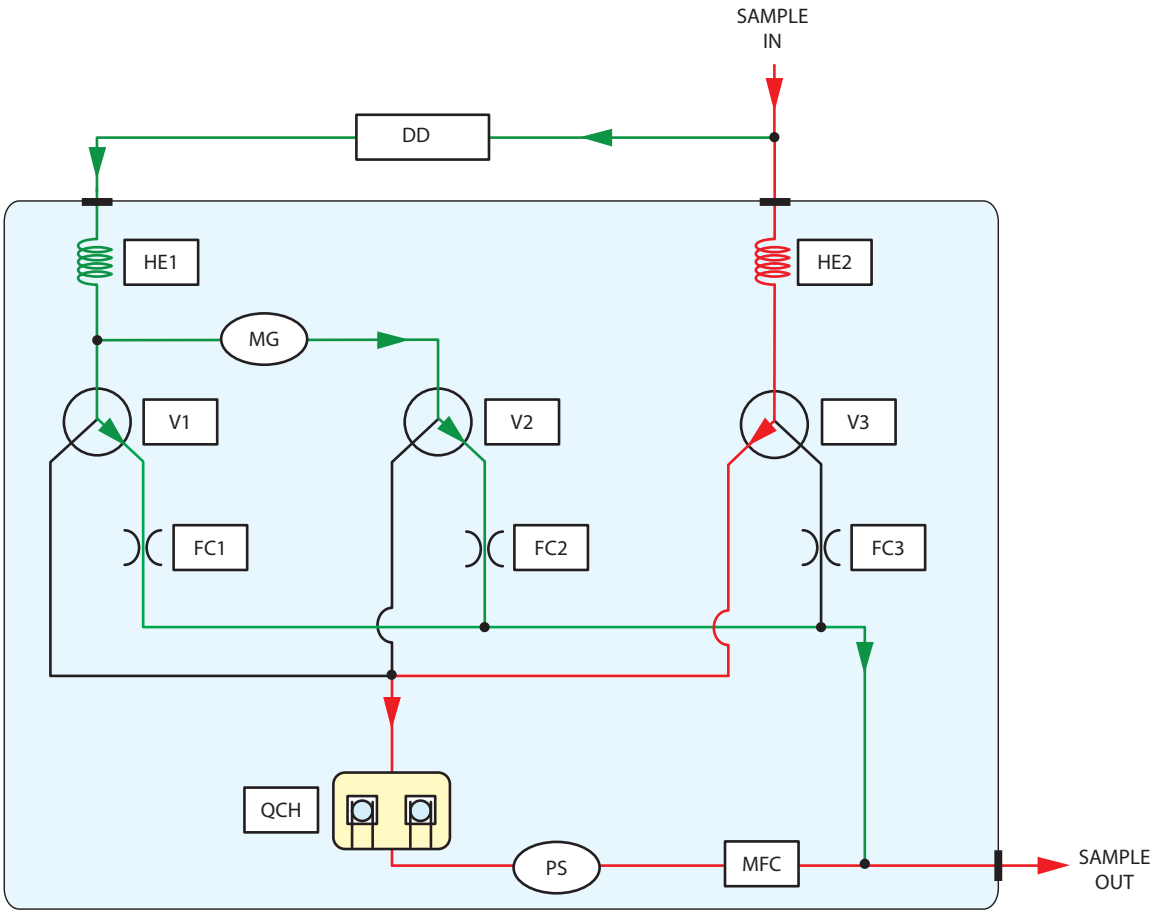

Key			
DD	Desiccant column	**MG**	Moisture generator
MFC	Mass flow controller	**V1, V2, V3**	Solenoid valves
QCH	Sensor cell	**HE1, HE2**	Heat exchanger
PS	Pressure sensor	**FC1, FC2, FC3**	Flow control

Figure 39 *Measurement Cycle (Phase 2) Calibration Flow*

During this second phase of the measurement cycle the frequency difference between the reference and sensor crystals is measured again (i.e. wet state). After signal processing the measured difference in frequency between the wet and dry phases is proportional to the moisture content of the sample gas.

3.10 Calibration Cycle

To maintain the precision of the analyzer, the unit can self calibrate and adjust its internal reference table based on the result.

This is achieved as follows:

An internal moisture generator uses a permeation tube to generate a nominal moisture content of 0.5, 5 or 50 ppm_v, depending on what was specified at the time of order.

The calibration is carried out in a two phase cycle. Initially V1 is energized, causing the dried sample gas to be routed to the sensor cell for a period of 30 seconds, as shown by the red line in *Figure 27.*

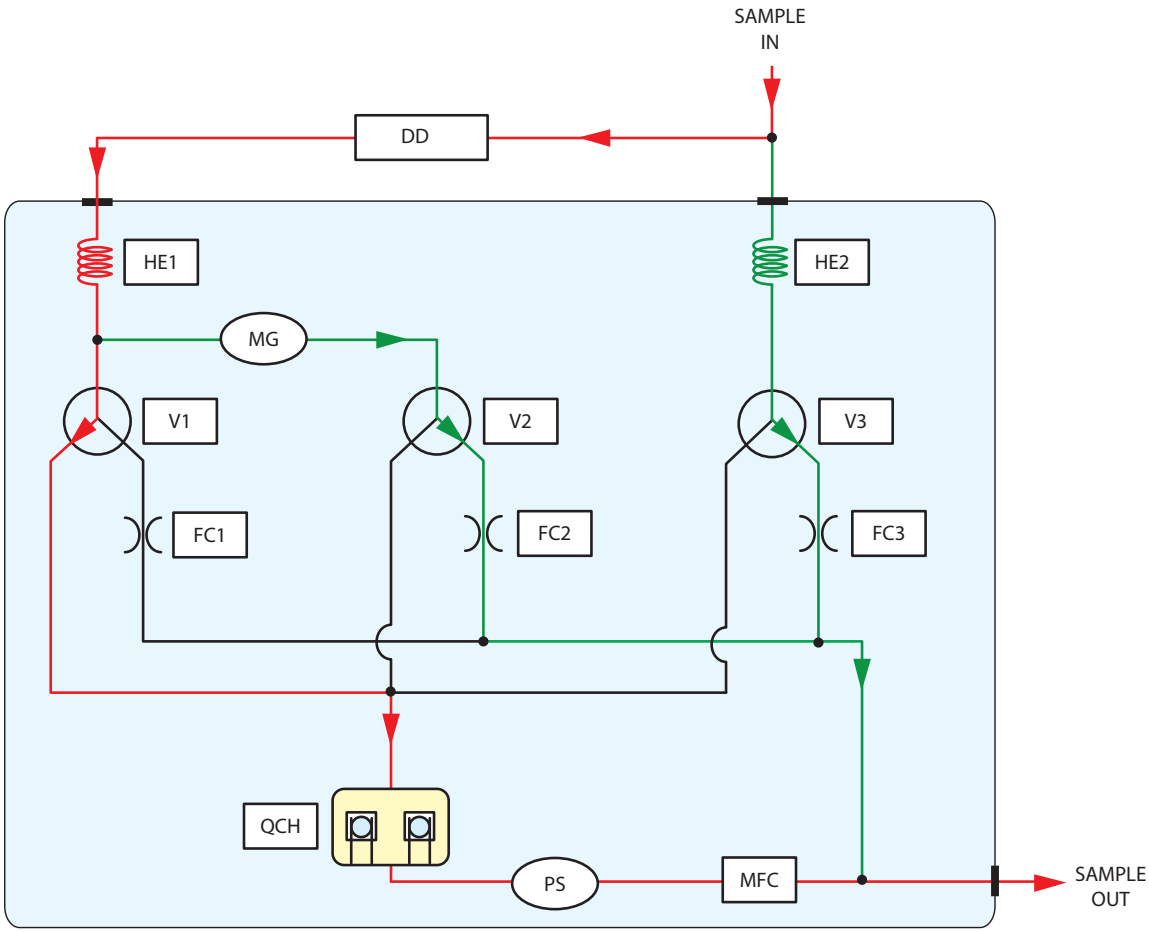

Key			
DD	Desiccant column	**MG**	Moisture generator
MFC	Mass flow controller	**V1, V2, V3**	Solenoid valves
QCH	Sensor cell	**HE1, HE2**	Heat exchanger
PS	Pressure sensor	**FC1, FC2, FC3**	Flow control

Figure 40 *Calibration Cycle (Phase 1) – Dried Sample Flow*

At the close of this 30 second sampling period, V1 is de-energized, and V2 is energized; so that the reference gas from the moisture generator is now routed to the sensor cell. This is the beginning of phase 2, see *Figure 28.*

The calibration reference gas is measured for a further 30 seconds, until V2 is de-energized and the cycle begins again.

The inactive sample paths are continually purged during each phase (see green flow paths on *Figures 25 and 26)*.

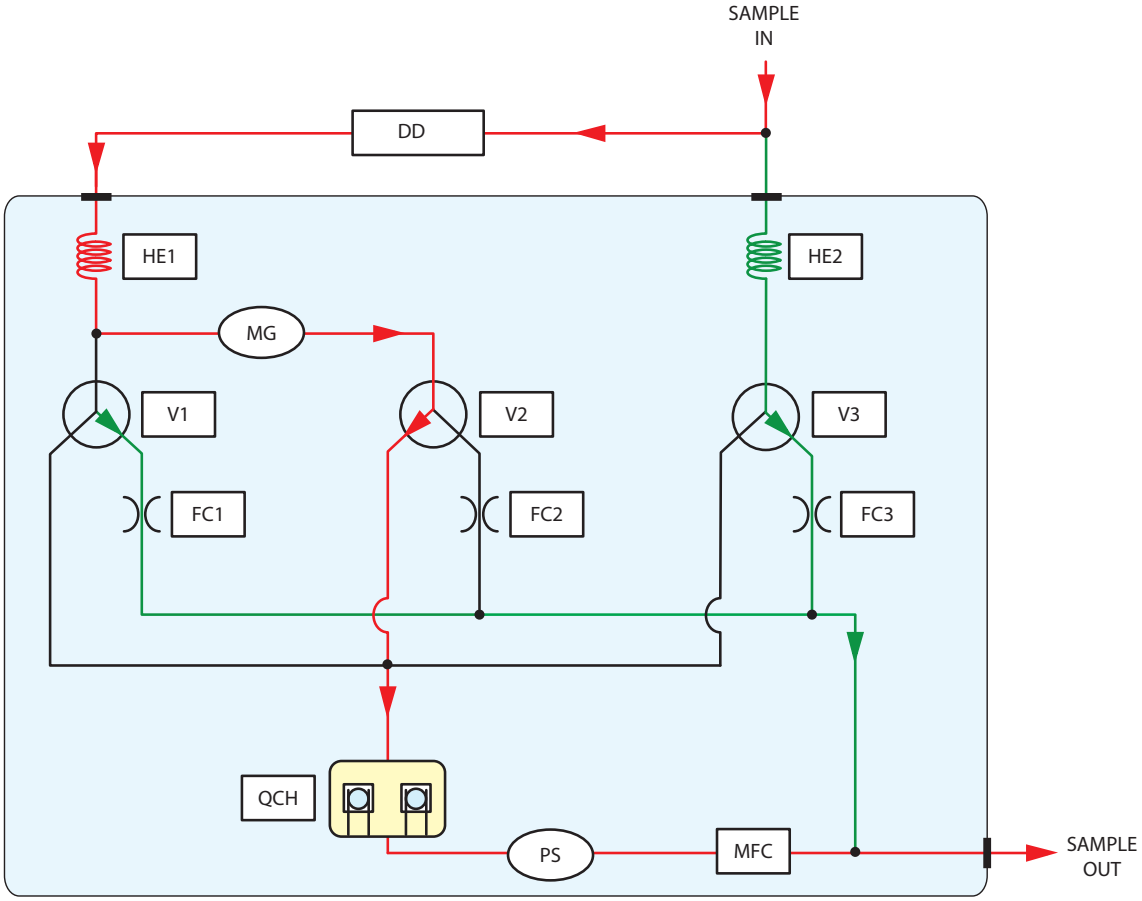

Key			
DD	Desiccant column	**MG**	Moisture generator
MFC	Mass flow controller	**V1, V2, V3**	Solenoid valves
QCH	Sensor cell	**HE1, HE2**	Heat exchanger
PS	Pressure sensor	**FC1, FC2, FC3**	Flow control

Figure 41 *Calibration Cycle (Phase 2) – Sample Flow*

The analyzer will run though a number of 'settling cycles' to ensure the internal sample system is fully equilibrated with the calibration gas before beginning to collect calibration data.

After the system has carried out the selected number of settling cycles, it begins the calibration cycles. During these cycles, the difference between the calibration reference gas and the dried gas is measured. As the moisture content of the calibration gas is known, the difference between this and the measured value is equal to the error in the system.

The QMA401 stores this measured calibration value and automatically compensates subsequent sample readings for any offset that may have occurred to the factory calibration curve.

4 MAINTENANCE

Gas line connections to the measurement system must be isolated and de-pressurized before any work commences.

Any loose or disturbed pipework or couplings must be leak tested.

The design of the QMA401 and measurement system is such that minimal maintenance is required. However, if a fault does occur with the system that is not covered within this manual please contact Michell Instruments (see contact information at www.michell.com) or your local representative.

Any maintenance of this product should only be conducted by suitably trained personnel. Any unauthorized maintenance of this product not covered by this manual could invalidate the product warranty.

In addition to general maintenance procedures which involve the cleaning of the instrument's casing and display, the desiccant column can be removed and replaced by the operator.

4.1 Removal and Replacement of the Power Supply Fuse

The fuse can be serviced in the field by an approved Michell Instruments' service technician. Please consult your Michell service representative for spare or replacement parts.

4.2 Removal and Replacement of the Dryer Module

1. Undo push-catch to open dryer access panel.

2. Remove supplied spanner/wrench from the mount on the dryer access panel.

3. Loosen the VCR fittings on the dryer module using the supplied spanner/ wrench.

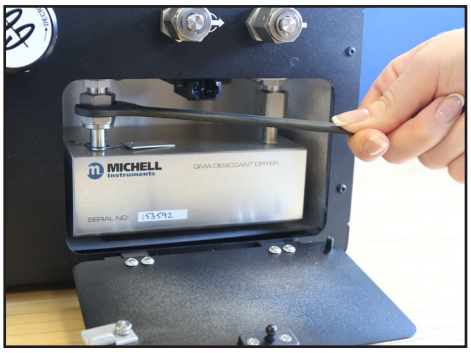

4. Disconnect the VCR fittings by hand.

5. Remove dryer module.

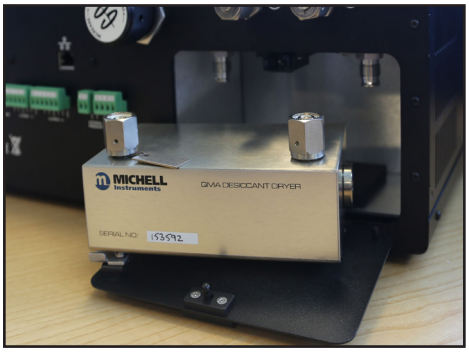

6. Fit replacement dryer module, following these instructions in reverse to re-assemble.

5 CALIBRATION

5.1 Traceability

The calibration of this analyzer is traceable to NPL (UK) and NIST (US). A nine-point certificate is supplied with every analyzer.

If these facilities are not available the analyzer must be returned to the manufacturer, Michell Instruments, or one of their approved agents. A list of worldwide Michell Instruments' offices is provided at www.michell.com.

The analyzer is calibrated at a fixed pressure over the sensing crystals, and the analyzer's calibration is only valid while the inlet pressure and back pressures have been set correctly.

Figure 42 shows a typical calibration certificate.

CERTIFICATE OF CALIBRATION

QMA 401

MICHELL Instruments

The under-mentioned item has been calibrated at the following points in the Michell Instruments' Humidity Calibration Laboratory against Test Equipment traceable to the NATIONAL PHYSICAL LABORATORY, Middlesex, United Kingdom and to the NATIONAL INSTITUTE OF STANDARDS & TECHNOLOGY, Gaithersburg, Maryland, USA.

Certificate Number	0	**Analyzer Serial Number**	0
		Oven Serial Number	0
Acknowledgement Number	0		
		Beat Frequency (Hz)	7827
Test Date	17/07/15	**MG Moisture Level (ppm)**	54.37
Test Equipment	Q0433		
		Inlet/Sensor Pressure (barg)	1
Calibration Temperature (°C)	21 (+/-2)	**Outlet/Back Pressure (barg)**	0
Work Instruction Number	520		

Reference (ppm)	Measured Moisture Content (ppm)
0.130	0.128
0.291	0.289
1.401	1.469
5.371	5.728
17.51	18.62
58.26	59.96
111.4	108.7
204.7	198.6
616.3	591.6

Comments: N/A

Calibration PASS. The results are within specification of the analyzer at the measured points detailed.

Traceability to National Physical Laboratory is over the range -90°C to +90°C. (0.095 to 2253559 ppmV)
Traceability to National Institute of Standards and Technology is over the range -75°C to +20°C. (1.204 to 23632 ppmV)

Approved Signatory: **Date of Issue:** 27/07/15

Figure 42 *Typical QMA401 Calibration Certificate*

6 APPLICATION SOFTWARE OVERVIEW

With the QMA Application Software you can:

- Read and edit all main analyzer parameters
- Chart and log all main analyzer parameters
- Perform a calibration
- Reset the analyzer to factory defaults

Communication between the application software and analyzer is via Modbus RTU over RS485.

6.1 System Requirements

For the best software performance, the host computer should meet the following minimum requirements:

O/S	Windows XP, Windows VISTA, Windows 7 (32-bit or 64-bit), Windows 8 (32-bit or 64-bit)
CPU	Intel Pentium III 500 MHz (recommended: Pentium 4 1.6 GHz or Pentium M 1.0 GHz, or Athlon 1.2 GHz or higher)
RAM	512 MB (recommended: 1.0 GB)
Disk space	Application = 3 MB

6.2 System Connection

If using an RS485 connection – connect the communications cable and RS485 to RS232 converter to a spare serial port or serial to USB adaptor on the host computer.

If using USB – connect the analyzer directly to the host computer using a USB cable after installing the application software.

If using Modbus TCP – connect the analyzer to a LAN using an Ethernet cable.

For information the default serial settings are:

Baud	9600
Parity	NONE
Data bits	8
Stop bits	1

6.3 Getting Started

On launching the software the connection console will appear, allowing you to establish communications between the software and QMA analyzer.

Choose the Modbus slave address (default is 1) and the serial COM port that the instrument is connected to.

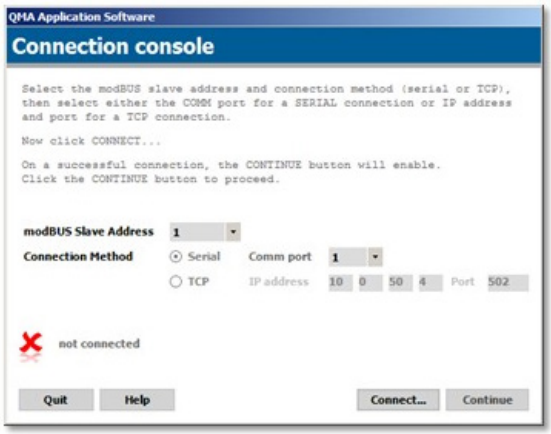

Click the 'Connect...' button.

After a few seconds the software will report a successful connection or not. If the connection is successful, the word 'Connected' and a green tick will appear.

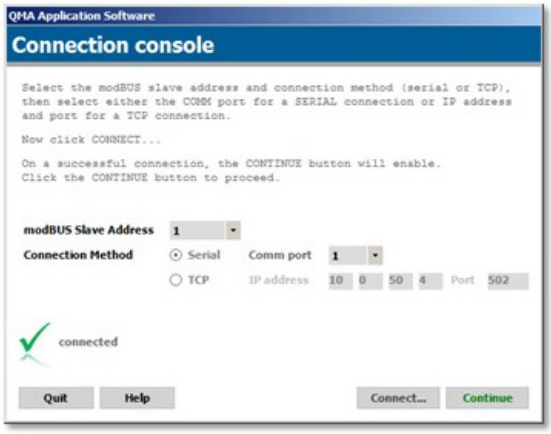

Click the 'Continue' button to continue onto the main acquisition window.

6.3.1 Connection Method (Serial Connection (RS485 or USB)

Select the COM port to which the analyzer is connected.

6.3.1.1 RS485 Connection

An RS485 to RS232 converter must be used when connecting to a computer's built in serial port, or when connecting to a RS232 to USB adaptor.

To find the COM port number of assigned to a USB to RS232 adapter, open Windows 'device manager' and expand the 'Ports (COM & LPT)' branch.

The USB to RS232 adapter should be listed in this branch, together with the COM port number.

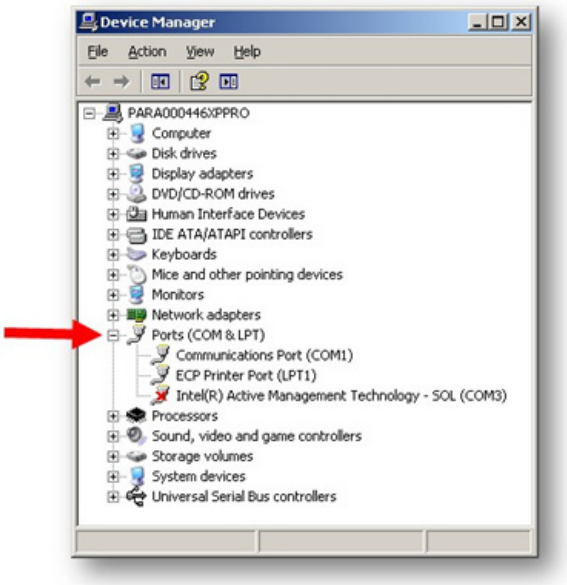

6.3.1.2 USB Connection

If directly connecting via USB, the analyzer will appear in Device Manager as a virtual serial port with the name 'Michell Instruments USB to UART Bridge Controller', followed by its assigned COM port number, e.g. COM3.

6.3.1.3 Modbus TCP Connection (Ethernet)

Enter the IP address and port number of the analyzer. The instrument IP and port should be first configured in the Ethernet menu. See section 3.7.6 for further information.

6.4 Main Window

The application software will automatically begin acquiring, displaying and charting data from the analyzer once a connection has been established.

Data acquisition occurs approximately every 2 seconds. The chart update rate is 2 seconds but this may be changed by using the chart options window.

Data logging does not start automatically, this is indicated by the text 'NOT LOGGING' on the Main Screen. Click the 'Data Logging' button to launch the data logging setup window.

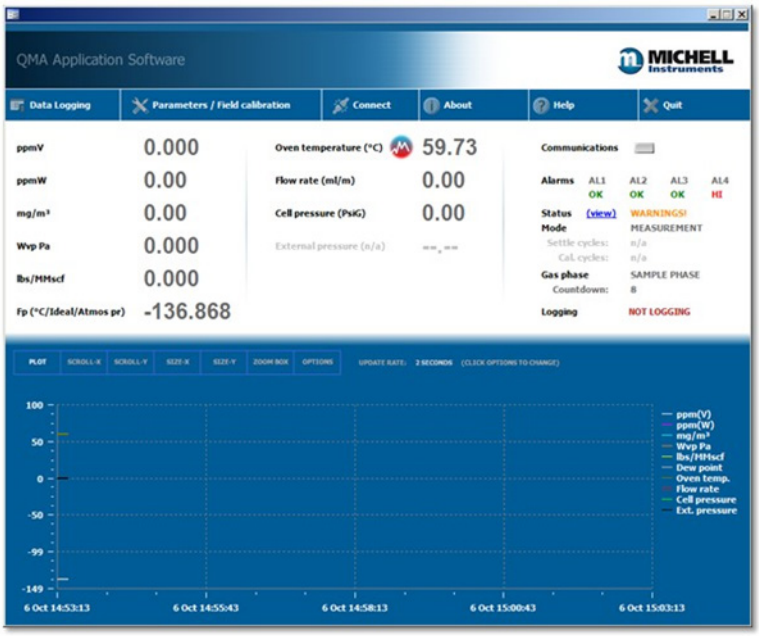

To configure analyzer parameters, click the 'Parameters / Field calibration' button to launch the parameters window.

Click the 'Connect' button to re-connect with the analyzer or connect with a new analyzer.

6.5 Using the Chart

Chart mode buttons

The chart defaults to plot mode.

To change the chart mode, click one of the buttons along the top of the chart, described below.

Function	Description
PLOT	Puts chart into live plot mode
SCROLL-X	Allows the user to scroll the X-axis left and right
SCROLL-Y	Allows the user to scroll the Y-axis up and down
SIZE-X	Allows the user to size the X-axis
SIZE-Y	Allows the user to size the Y-axis
ZOOM BOX	Allows the user to draw a box in the data area which will zoom in on the data within the box. The box is drawn from top-left to bottom-right
OPTIONS	Invokes the chart options window

After using the scroll, size or zoom modes, changing the chart back to plot mode resets the X and Y axes.

6.5.1 Chart Options Window

The Chart Options Window allows the user to configure the following chart properties:

Function	Description
Show/hide series	Allows the user to show or hide data series from the chart. Tick to show, untick to hide
Restore on plot mode	When ticked, selecting plot mode will restore the X and Y axis to the state before they were modified (after sizing, zooming or scrolling)
Y-axis scale	Select either 'autoscale all data' or 'manual scaling' of the Y-axis. Selecting manual scaling will show a min and max input text box
Update rate	Allows the user change the update rate of the chart
Reset chart	Clears all chart data

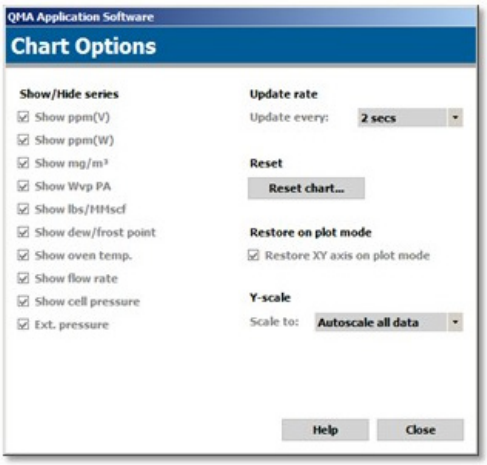

6.6 Data Logging

Click the 'Data Logging' button on the Main Window to launch the Data Logging Setup Window.

Choosing a log file filename

Choose a log file manually by clicking the button.

Click the 'Auto generate' button to generate a filename based on the current date and time.

An auto generated log file filename has the following format:

QMA dd-mm-yy hh:mm:ss.log

where dd = date, mm = month, yy = year, hh = hour (24 hr), mm = minutes and ss = seconds

Example:

QMA 15-12-14 13.41.55.log

which is 15th December 2014 at 1.41.55 pm

Auto generated log files are stored in the local My Documents folder

C:\Users\username\Documents\
C:\Documents and Settings\username\Documents\

6.6.1 Configuring Logging Start Time

Logging may be started immediately or at a user-defined time in the future.

To start logging immediately, select the 'Start when **START** is clicked' option.

To start logging at a user-defined time in the future, select the 'Start at this date/time:' option and enter the date and time when you wish to start logging.

6.6.2 Configuring Logging Stop Time

If the 'Stop when STOP is clicked' option is selected, then the software will continue logging indefinitely until either the 'STOP' button is clicked or the software is shut down.

If the 'Stop at this date/time' option is selected then the software will continue logging until the selected date and time is reached or when the 'STOP' button is clicked or the software is shut down.

6.6.3 Starting the Log

After choosing a filename and configuring logging start and stop times, click the 'START' button.

6.6.4 Viewing a Log

Click the 'view log file' button to view a log file within Windows notepad.

6.7 Parameters / Field Calibration

Analyzer parameters may be viewed and edited via this window.

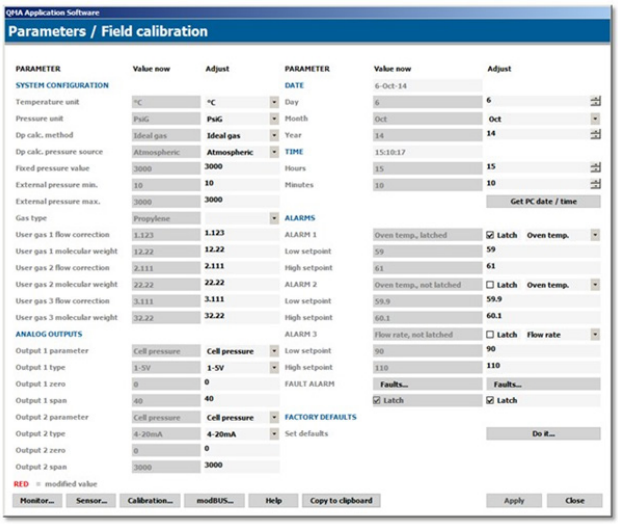

Current (live) values are shown in the 'Value now' column. New values may be entered in the 'Adjust' column. When a value is modified it will be shown in red and the 'Apply' button will enable.

Click the 'Apply' button to apply the modified values to the analyzer.

To write the PC date and time to the analyzer, first click the 'Get PC date/time' button to load the values into their respective positions on the screen, then click the 'Apply' button.

To reset the analyzer to factory defaults, press the 'Do it ...' button under the Factory Defaults heading.

6.7.1 Field Calibration

This window allows manual analyzer calibrations to be performed, and settings for automatic calibrations configured.

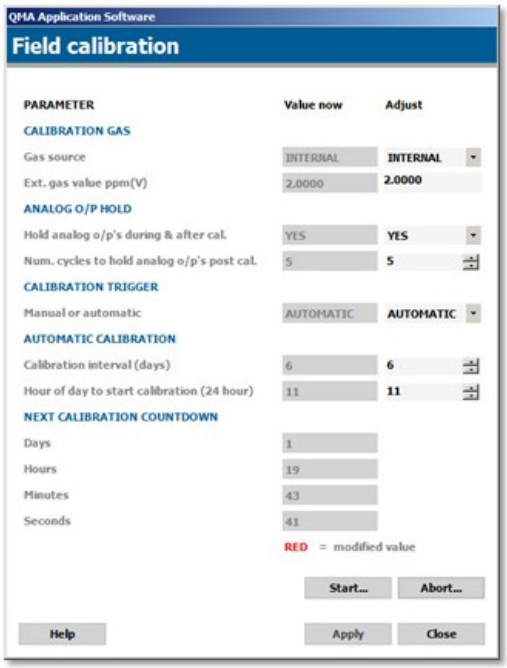

7 SHIPPING

7.1 Preparation for Shipping and Packing

For shipping purposes, the instrument should be packed into its original carton, the latter providing the recommended degree of protection during transit.

To prepare the instrument for shipping, proceed as follows:

1. Switch off the instrument, isolate the power supply and remove the power supply cable.
2. Remove the analog connector and alarm output connectors.
3. Isolate the incoming sample line and remove the connections to the GAS IN and GAS OUT ports.
4. Re-fit the VCR blanking caps supplied to the GAS IN and GAS OUT ports. ***NOTE: This step is important to prevent reduction of dryer life***
5. Pack the instrument in its original case by first fitting the end packing, and lowering the instrument into the carton. Place any accessories being returned in the accessories box and place in the carton last.
6. Create a packing list detailing all equipment contained in the box, place it inside the box and seal the box. Ideally, for extra security, the box should be banded.

Appendix A

Technical Specifications

Appendix A Technical Specification

Performance	
Measurement Technology	Fast Response Quartz Crystal Microbalance
Calibrated Range	0.1...700 ppm_v
Measurement Range	0.1...2000 ppm_v
Accuracy	±10% of reading from 1...2000 ppm_v ±0.1 ppm_v between 0.1 & 1 ppm_v
Repeatability	±5% of the reading from 1...2000 ppm_v ±0.1 ppm_v between 0.1 & 1 ppm_v
Detection Limit	0.1 ppm_v
Available Units	ppm_v, ppm_w, mg/m^3, vapor pressure (Pa), frost point (°C), lbs/MMscf
Response Speed	T63 <2 mins to step change in either direction T95 <5 mins to step change in either direction
Automatic Calibration	Internal moisture generator source calibrated traceable to NPL & NIST
Sensitivity	0.1 ppm_v or 1% of reading, whichever is greater
Electrical Specifications	
Supply Voltage	85…264 V AC, 47/63 Hz
Max Power Consumption	150 VA
Alarms	1 x System Alarm, volt-free change-over (FORM C) 3 x process alarms, selectable for various parameters, volt free change-over (FORM C)
Communications	Analog Outputs: 2 channels, user selectable 4...20 mA or 1...5 V Digital Communications: RS485/USB Modbus RTU, Ethernet Modbus TCP
Data logging	Logging to SD card at user-selectable interval or to PC via application software
Local Interface	7" color touch screen LCD
Operating Conditions	
Inlet Pressure	1 barg max (14.5psig) With optional inlet pressure regulator: 300 barg max (4351psig)
Outlet Pressure	Atmospheric
Sample Flow	300 ml/min total flow without bypass
Sample Gas Temperature	0...+100 °C
Operating Environment	+5...+45 °C (+41...+113 °F) up to 90 %rh
Mechanical Specifications	
Enclosure	19" Rackmount, 4U x 434 mm
Gas Connections	1/4" VCR(M)
Weight	13.5 kg (29.8 lbs)

Appendix B

Calculating Conversion Factors for Gas Mixes

Appendix B Calculating Conversion Factors for Gas Mixes

Setting the correct flow rate is crucial to correct operation of the QMA401. If the gas being sampled contains multiple components, then the conversion factor must be calculated and entered as a 'user' carrier gas.

The conversion factor will be altered for gas mixtures as follows:

$$\frac{1}{C_{mix}} = \frac{V_1}{C_1} + \frac{V_2}{C_2} + \frac{V_n}{C_n}$$

C_{mix} = Conversion factor for the gas mix
C_n = Conversion factor for the gas 'n'
V_n = Conversion factor for the gas 'n' in the mix

For example, if the gas mixture contains:

10% N_2	$C_1 = 1.000$
30% Ar	$C_2 = 1.395$
50% CH_4	$C_3 = 0.7419$
10% CO_2	$C_4 = 0.7186$

$$\frac{1}{C_{mix}} = \frac{0.1}{1} + \frac{0.3}{1.395} + \frac{0.5}{0.7419} + \frac{0.1}{0.7186} \qquad C_{mix} = 0.8865$$

Below are the conversion factors for some common gases. If the gas you are measuring contains a component that is not on this list, please contact your Michell representative.

1.000	Air
1.395	Ar – Argon
0.742	CH_4 – Methane
0.594	C_2H_2 – Ethyne
0.568	C_2H_4 – Ethelyne
0.466	C_2H_6 – Ethane
0.377	C_3H_6 – Propylene
0.320	C_3H_8 – Propane
0.238	C_4H10 – Butane
0.999	CO – Carbon Monoxide
0.718	CO_2 – Carbon Dioxide
1.019	H_2 – Hydrogen
1.422	He – Helium
1.446	Kr – Krypton
1.002	N_2 – Nitrogen
1.415	Ne – Neon
0.757	NH_3 – Ammonia
0.971	NO – Nitrogen Oxide
0.694	N_2O – Nitrous Oxide
0.978	O_2 – Oxygen
1.339	XE – Xenon

Appendix C

Modbus Register Map

Appendix C Modbus Holding Register Map

All the data values relating to the QMA601 are stored in holding registers. Each of these registers is two bytes (16-bits wide). Some of these registers contain instrument specific values e.g. its own unique system address, IP address values, etc. Others registers hold specific real time data such as temperature.

Each Modbus message has a two part address code, one for the low byte (bits 0 through 7) and one for the high byte (bits 8 through 15). The facility exists for multiple registers, specified by a high and low byte contained in the query message, to be addressed and read by the same message.

The table below describes the instruments' registers with their respective address locations, together with their relevant register configurations and register map definitions.

The register maps below the table define the data allocated to each bit/byte for each register type.

Address #	Function Description	Read/ Write	Default	Register Config	Notes/ Real Value Range
0	ModBus Configuration	R/W		C	
1	System Configuration	R/W		D	
2	Alarm Configuration	R/W		E	
3	Analogue Output Configuration	R/W		F	
4	Internal Logging Configuration	R/W		U	
5	MFC Span in mlm / Gas Number for flow rate and mol weight correction	R/W		S	
6	PID – Proportional Value	R/W		A3	0.01...100.00%
7	PID – Integral Value	R/W		A3	0.01...1000.0%
8	PID – Derivative Value	R/W		A3	0.01...100.00%
9	Warning Relay Alarm warning selection mask	R/W		M	
10	Dryer Capacity (ppm) / Moist Gen Capacity (days)	R/W	255 / 103	V	
11	Signal Filter Settings	R/W		W	
12	Alarm1 – Low Set point	R/W		See App A	
13	Alarm1 – High Set point	R/W		See App A	
14	Alarm2 – Low Set point	R/W		See App A	
15	Alarm2 – High Set point	R/W		See App A	
16	Alarm3 – Low Set point	R/W		See App A	
17	Alarm3 – High Set point	R/W		See App A	
18	Analogue Out 1 – Low Set point	R/W		See App A	
19	Analogue Out 1 – High Set point	R/W		See App A	
20	Analogue Out 2 – Low Set point	R/W		See App A	
21	Analogue Out 2 – High Set point	R/W		See App A	
22	Fixed Pressure Input Value	R/W		See App A	
23	Next Calibration – Configuration	R/W		P1	
24	User low ppm_v limit	R/W		A3	0.00...0.10
25	Next Calibration – Intervals between cal	R/W		P2	
26	Next Calibration – External Cal Val – Hi Word	R/W		I	0.01...2000.00 ppm_v
27	Next Calibration – External Cal Val – Lo Word	R/W		I	0.01...2000 .00 ppm_v
28	Last Cal Day/Month/Year	R		J	
29	Last Cal Details	R/W		K	SCF can be set (for factory calibration)
30	Last Cal – 1 Day/Month/Year	R		J	

31	Last Cal – 1 Details	R		K	
32	Last Cal – 2 Day/Month/Year	R		J	
33	Last Cal – 2 Details	R		K	
34	Last Cal – 3 Day/Month/Year	R		J	
35	Last Cal – 3 Details		R		K
36	Last Cal – 4 Day/Month/Year	R		J	
37	Last Cal – 4 Details		R		K
38	User Gas Flow Correction Val1	R/W		A4	0.100...10.000
39	User Gas Flow Correction Val2	R/W		A4	0.100...10.000
40	User Gas Flow Correction Val3	R/W		A4	0.100...10.000
41	User Gas Mol Weight Val1	R/W		A3	0.100...500.00
42	User Gas Mol Weight Val2	R/W		A3	0.100...500.00
43	User Gas Mol Weight Val3	R/W		A3	0.100...500.00
44	Ext (line) Pressure Sensor Min	R/W		See App A	
45	Ext (line) Pressure Sensor Max	R/W		See App A	
46	Solenoid Hold Power in %	R/W		A1	
47	*Oven Temperature – Cal ADC Val	R/W		A1	0...4095
48	*Internal Pressure – ADC Val 4 mA	R/W		A1	1...4095
49	*Internal Pressure – ADC Val 20 mA	R/W		A1	1...4095
50	*Analogue Output 1 – DAC 4 mA Value	R/W		A1	0...65535
51	*Analogue Output 1 – DAC 20 mA Value	R/W		A1	0...65535
52	*Analogue Output 2 – DAC 4 mA Value	R/W		A1	0...65535
53	*Analogue Output 2 – DAC 20 mA Value	R/W		A1	0...65535
54	*External Pressure – ADC Val 4 mA	R/W		A1	0...4095
55	*External Pressure – ADC Val 20 mA	R/W		A1	0...4095
56	*RTC Cal Value – ppm_v error	R/W		A1	0...121
57	*Analyzer Serial Number HI WORD	R/W		32 bit Integer HI Word	1...4294967296
58	*Analyzer Serial Number LO WORD	R/W		32 bit Integer LO Word	"
59					
60	*Osc FW Version Hi Word	R		I	
61	*Osc FW Version Lo Word	R		I	
62	*Osc Table1 DeltaF 01 Hi Word	R/W		I	0.0001...2000.0000
63	*Osc Table1 DeltaF 01 Lo Word	R/W		I	"
64	*Osc Table1 DeltaF 02 Hi Word	R/W		I	0.0001...2000.0000
65	*Osc Table1 DeltaF 02 Lo Word	R/W		I	"
66	*Osc Table1 DeltaF 03 Hi Word	R/W		I	0.0001...2000.0000
67	*Osc Table1 DeltaF 03 Lo Word	R/W		I	"
68	*Osc Table1 DeltaF 04 Hi Word	R/W		I	0.0001...2000.0000
69	*Osc Table1 DeltaF 04 Lo Word	R/W		I	"
70	*Osc Table1 DeltaF 05 Hi Word	R/W		I	0.0001...2000.0000
71	*Osc Table1 DeltaF 05 Lo Word	R/W		I	"
72	*Osc Table1 DeltaF 06 Hi Word	R/W		I	0.0001...2000.0000
73	*Osc Table1 DeltaF 06 Lo Word	R/W		I	"
74	*Osc Table1 DeltaF 07 Hi Word	R/W		I	0.0001...2000.0000
75	*Osc Table1 DeltaF 07 Lo Word	R/W		I	"
76	*Osc Table1 DeltaF 08 Hi Word	R/W		I	0.0001...2000.0000
77	*Osc Table1 DeltaF 08 Lo Word	R/W		I	"
78	*Osc Table1 DeltaF 09 Hi Word	R/W		I	0.0001...2000.0000
79	*Osc Table1 DeltaF 09 Lo Word	R/W		I	"
80	*Osc Table1 DeltaF 10 Hi Word	R/W		I	0.0001...2000.0000

81	*Osc Table1 DeltaF 10 Lo Word	R/W		I	"
82	*Osc Table1 DeltaF 11 Hi Word	R/W		I	0.0001...2000.0000
83	*Osc Table1 DeltaF 11 Lo Word	R/W		I	"
84	*Osc Table1 DeltaF 12 Hi Word	R/W		I	0.0001...2000.0000
85	*Osc Table1 DeltaF 12 Lo Word	R/W		I	"
86	*Osc Table1 Ref 01 Hi Word	R/W		I	0.0001...10000.0000
87	*Osc Table1 Ref 01 Lo Word	R/W		I	"
88	*Osc Table1 Ref 02 Hi Word	R/W		I	0.0001...10000.0000
89	*Osc Table1 Ref 02 Lo Word	R/W		I	"
90	*Osc Table1 Ref 03 Hi Word	R/W		I	0.0001...10000.0000
91	*Osc Table1 Ref 03 Lo Word	R/W		I	"
92	*Osc Table1 Ref 04 Hi Word	R/W		I	0.0001...10000.0000
93	*Osc Table1 Ref 04 Lo Word	R/W		I	"
94	*Osc Table1 Ref 05 Hi Word	R/W		I	0.0001...10000.0000
95	*Osc Table1 Ref 05 Lo Word	R/W		I	"
96	*Osc Table1 Ref 06 Hi Word	R/W		I	0.0001...10000.0000
97	*Osc Table1 Ref 06 Lo Word	R/W		I	"
98	*Osc Table1 Ref 07 Hi Word	R/W		I	0.0001...10000.0000
99	*Osc Table1 Ref 07 Lo Word	R/W		I	"
100	*Osc Table1 Ref 08 Hi Word	R/W		I	0.0001...10000.0000
101	*Osc Table1 Ref 08 Lo Word	R/W		I	"
102	*Osc Table1 Ref 09 Hi Word	R/W		I	0.0001...10000.0000
103	*Osc Table1 Ref 09 Lo Word	R/W		I	"
104	*Osc Table1 Ref 10 Hi Word	R/W		I	0.0001...10000.0000
105	*Osc Table1 Ref 10 Lo Word	R/W		I	"
106	*Osc Table1 Ref 11 Hi Word	R/W		I	0.0001...10000.0000
107	*Osc Table1 Ref 11 Lo Word	R/W		I	"
108	*Osc Table1 Ref 12 Hi Word	R/W		I	0.0001...10000.0000
109	*Osc Table1 Ref 12 Lo Word	R/W		I	"
110	*BLANK3	R/W		Don't Care	
111	*Osc Table1 Cal Flow Rate ml/m	R/W		A2	10...2000 ml/m
112	*Osc Table1 Cal Int Moist Gen Val Hi Word	R/W		I	0.0001...10000.0000
113	*Osc Table1 Cal Int Moist Gen Val Lo Word	R/W		I	"
114	*Osc Table1 Cal Oven SP degC/ Cal Date DAY	R/W		Q	40...80 / 1...31
115	*Osc Table1 Cal Date MONTH / YEAR	R/W		Q	1...12 / 0...99
116	*Osc Table1 Cal Sample Phase Time	R/W		A1	10...65535 seconds
117	*Osc Table1 Cal Reference Phase Time	R/W		A1	10...65535 seconds
118	*Osc Table1 Cal Settling Cycles	R/W		A1	4...240 cycles
119	*Osc Table1 Cal Calibration Cycles	R/W		A1	4...60 cycles
120	*BLANK	R/W		Don't Care	
121	*Osc Table1 Cal Cell Pressure Reading	R/W		A3	0.00...10.00 barG
122	*Osc Table1 Cal Beat Freq of Ref	R/W		A1	1000...15000 (NOT USED)
123	*Osc Table1 Cal Beat Freq of Moist Gen	R/W		A1	1000...15000 (NOT USED)
124	*Osc Table2 DeltaF 01 Hi Word	R/W		I	0.0001...2000.0000
125	*Osc Table2 DeltaF 01 Lo Word	R/W		I	"
126	*Osc Table2 DeltaF 02 Hi Word	R/W		I	0.0001...2000.0000
127	*Osc Table2 DeltaF 02 Lo Word	R/W		I	"
128	*Osc Table2 DeltaF 03 Hi Word	R/W		I	0.0001...2000.0000
129	*Osc Table2 DeltaF 03 Lo Word	R/W		I	"

130	*Osc Table2 DeltaF 04 Hi Word	R/W		I	0.0001...2000.0000
131	*Osc Table2 DeltaF 04 Lo Word	R/W		I	"
132	*Osc Table2 DeltaF 05 Hi Word	R/W		I	0.0001...2000.0000
133	*Osc Table2 DeltaF 05 Lo Word	R/W		I	"
134	*Osc Table2 DeltaF 06 Hi Word	R/W		I	0.0001...2000.0000
135	*Osc Table2 DeltaF 06 Lo Word	R/W		I	"
136	*Osc Table2 DeltaF 07 Hi Word	R/W		I	0.0001...2000.0000
137	*Osc Table2 DeltaF 07 Lo Word	R/W		I	"
138	*Osc Table2 DeltaF 08 Hi Word	R/W		I	0.0001...2000.0000
139	*Osc Table2 DeltaF 08 Lo Word	R/W		I	"
140	*Osc Table2 DeltaF 09 Hi Word	R/W		I	0.0001...2000.0000
141	*Osc Table2 DeltaF 09 Lo Word	R/W		I	"
142	*Osc Table2 DeltaF 10 Hi Word	R/W		I	0.0001...2000.0000
143	*Osc Table2 DeltaF 10 Lo Word	R/W		I	"
144	*Osc Table2 DeltaF 11 Hi Word	R/W		I	0.0001...2000.0000
145	*Osc Table2 DeltaF 11 Lo Word	R/W		I	"
146	*Osc Table2 DeltaF 12 Hi Word	R/W		I	0.0001...2000.0000
147	*Osc Table2 DeltaF 12 Lo Word	R/W		I	"
148	*Osc Table2 Ref 01 Hi Word	R/W		I	0.0001...10000.0000
149	*Osc Table2 Ref 01 Lo Word	R/W		I	"
150	*Osc Table2 Ref 02 Hi Word	R/W		I	0.0001...10000.0000
151	*Osc Table2 Ref 02 Lo Word	R/W		I	"
152	*Osc Table2 Ref 03 Hi Word	R/W		I	0.0001...10000.0000
153	*Osc Table2 Ref 03 Lo Word	R/W		I	"
154	*Osc Table2 Ref 04 Hi Word	R/W		I	0.0001...10000.0000
155	*Osc Table2 Ref 04 Lo Word	R/W		I	"
156	*Osc Table2 Ref 05 Hi Word	R/W		I	0.0001...10000.0000
157	*Osc Table2 Ref 05 Lo Word	R/W		I	"
158	*Osc Table2 Ref 06 Hi Word	R/W		I	0.0001...10000.0000
159	*Osc Table2 Ref 06 Lo Word	R/W		I	"
160	*Osc Table2 Ref 07 Hi Word	R/W		I	0.0001...10000.0000
160	*Osc Table2 Ref 07 Lo Word	R/W		I	"
162	*Osc Table2 Ref 08 Hi Word	R/W		I	0.0001...10000.0000
163	*Osc Table2 Ref 08 Lo Word	R/W		I	"
164	*Osc Table2 Ref 09 Hi Word	R/W		I	0.0001...10000.0000
165	*Osc Table2 Ref 09 Lo Word	R/W		I	"
166	*Osc Table2 Ref 10 Hi Word	R/W		I	0.0001...10000.0000
167	*Osc Table2 Ref 10 Lo Word	R/W		I	"
168	*Osc Table2 Ref 11 Hi Word	R/W		I	0.0001...10000.0000
169	*Osc Table2 Ref 11 Lo Word	R/W		I	"
170	*Osc Table2 Ref 12 Hi Word	R/W		I	0.0001...10000.0000
171	*Osc Table2 Ref 12 Lo Word	R/W		I	"
172	*BLANK	R/W		Dont Care	
173	*Osc Table2 Cal Flow Rate ml/m	R/W		A2	10...2000 ml/m
174	*Osc Table2 Cal Int Moist Gen Val Hi Word	R/W		I	0.0001...10000.0000
175	*Osc Table2 Cal Int Moist Gen Val Lo Word	R/W		I	"
176	*Osc Table2 Cal Oven SP degC / Cal Date DD	R/W		Q	40...80 / 1...31
177	*Osc Table2 Cal Date MMYY	R/W		Q	1...12 / 0...99
178	*Osc Table2 Cal Sample Phase Time	R/W		A1	10...240 seconds

179	*Osc Table2 Cal Reference Phase Time	R/W		A1	10...240 seconds
180	*Osc Table2 Cal Settling Cycles	R/W		A1	4...240 cycles
181	*Osc Table2 Cal Calibration Cycles	R/W		A1	4...60 cycles
182	*BLANK	R/W		Dont Care	
183	*Osc Table2 Cal Cell Pressure Reading LoW	R/W		A3	0.00...10.00 barG
184	*Osc Table2 Cal Beat Freq of Ref	R/W		A2	1000...15000 (NOT USED)
185	*Osc Table2 Cal Beat Freq of Moist Gen	R/W		A2	1000...15000 (NOT USED)
186	*Oven Serial Number HI WORD	R/W		32 bit Integer HI Word	1...4294967296
187	*Oven Serial Number LO WORD	R/W		32 bit Integer LO Word	"
188	*BLANK	R/W		Dont Care	
189	*BLANK	R/W		Dont Care	
190					
191					
192					
193					
194	User manual entry SCF value	W		A4	Write to set SCF value to use (0.2500...4.000)
195	Passcode for protected registers	W		A1	(NOT USED CURRENTLY)
196	RTC Set Hours/Mins	W		H	Write to set Time
197	RTC Set Day/Month/Year	W		J	Write to set Date
198	Instrument Command Register	W		T	
199					
200	Control Board f/w version	R		A3	
201	Moisture – ppm_v – Hi Word	R		I	
202	Moisture – ppm_v – Lo Word	R		I	
203	Moisture – ppm_w – Hi Word	R		I	
204	Moisture – ppm_w – Lo Word	R		I	
205	Moisture – mg/m^3 – Hi Word	R		I	
206	Moisture – mg/m^3 – Lo Word	R		I	
207	Moisture – Pa – Hi Word	R		I	
208	Moisture – Pa – Lo Word	R		I	
209	Moisture – lb/mmscf – Hi Word	R		I	
210	Moisture – lb/mmscf – Lo Word	R		I	
211	Dew point Hi Word in set unit	R		I	
212	Dew point Lo Word in set unit	R		I	
213	Enclosure Temperature in set unit	R		B2	
214	Ext Pressure Reading in set unit	R		See App A	
215	DeltaF Hi Word	R		I	
216	DeltaF Lo Word	R		I	
217	Beat Frequency Hi Word	R		I	
218	Beat Frequency Lo Word	R		I	
219	Oven Temperature in set unit	R		B3	
220	Flow Rate in ml/m	R		A2	
221	Heater Power in %	R		A2	
222	RTC Hours/Minutes	R		H	
223	RTC Seconds	R		A1	
224	RTC Day/Month/Year	R		J	
225	Ref Seconds Countdown	R		A1	

226	Pressure Reading of cell in set unit	R		See App A	
227	Sample Seconds Countdown	R		A1	
228	Cal Settling / Calibration Cycles Countdown	R		Q	
229	System Status Register	R		L	
230	Warning Flags Register	R		M	
231	Current Flow Correction value	R		A4	
232	Moist Gen Value Read After Cal – Hi Word	R		I	For cal use
233	Moist Gen Value Read After Cal – Lo Word	R		I	For cal use
234	Countdown to Next Cal HHDD	R		P2	
235	Countdown to Next Cal MMSS	R		Q	
236	10 Sample Averaged DeltaF Hi Word	R		I	Average of 10 deltaF Logs – For cal use
237	10 Sampled Averaged DeltaF Lo Word	R		I	"
238	10 Sample Averaged ppm_V Hi Word	R		I	Average of 10 ppm_V Logs – For cal use
239	10 Sampled Averaged ppm_V Lo Word	R		I	"
240	Oven Temperature Live Averaged ADC Val	R		A1	
241	Internal Pressure Live Averaged ADC Val	R		A1	
242	External Pressure Live Averaged ADC Val	R		A1	
243	Dryer Capacity Used / Moist Gen Capacity Used	R		V	
244					
245	Ethernet Settings – IP Address – Upper Bytes	R/W		Q	Volatile – Cannot write via Modbus, only via display
246	Ethernet Settings – IP Address – Lower Bytes	R/W		Q	"
247	Ethernet Settings – Def Gateway – Upper Bytes	R/W		Q	"
248	Ethernet Settings – Def Gateway – Lower Bytes	R/W		Q	"
249	Ethernet Settings – Subnet Mask – Upper Bytes	R/W		Q	"
250	Ethernet Settings – Subnet Mask – Lower Bytes	R/W		Q	"
251					
252	DeltaF Log t0 Hi Word	R		I	For cal use
253	DeltaF Log t0 Lo Word	R		I	For cal use
254	DeltaF Log t1 Hi Word	R		I	For cal use
255	DeltaF Log t1 Lo Word	R		I	For cal use
256	DeltaF Log t2 Hi Word	R		I	For cal use
257	DeltaF Log t2 Lo Word	R		I	For cal use
258	DeltaF Log t3 Hi Word	R		I	For cal use
259	DeltaF Log t3 Lo Word	R		I	For cal use
260	DeltaF Log t4 Hi Word	R		I	For cal use
261	DeltaF Log t4 Lo Word	R		I	For cal use
262	DeltaF Log t5 Hi Word	R		I	For cal use
263	DeltaF Log t5 Lo Word	R		I	For cal use
264	DeltaF Log t6 Hi Word	R		I	For cal use
265	DeltaF Log t6 Lo Word	R		I	For cal use
266	DeltaF Log t7 Hi Word	R		I	For cal use
267	DeltaF Log t7 Lo Word	R		I	For cal use
268	DeltaF Log t8 Hi Word	R		I	For cal use

269	DeltaF Log t8 Lo Word	R		I	For cal use
270	DeltaF Log t9 Hi Word	R		I	For cal use
271	DeltaF Log t9 Lo Word	R		I	For cal use
272	ppm_V Log t0 Hi Word	R		I	For cal use
273	ppm_V Log t0 Lo Word	R		I	For cal use
274	ppm_V Log t1 Hi Word	R		I	For cal use
275	ppm_V Log t1 Lo Word	R		I	For cal use
276	ppm_V Log t2 Hi Word	R		I	For cal use
277	ppm_V Log t2 Lo Word	R		I	For cal use
278	ppm_V Log t3 Hi Word	R		I	For cal use
279	ppm_V Log t3 Lo Word	R		I	For cal use
280	ppm_V Log t4 Hi Word	R		I	For cal use
281	ppm_V Log t4 Lo Word	R		I	For cal use
282	ppm_V Log t5 Hi Word	R		I	For cal use
283	ppm_V Log t5 Lo Word	R		I	For cal use
284	ppm_V Log t6 Hi Word	R		I	For cal use
285	ppm_V Log t6 Lo Word	R		I	For cal use
286	ppm_V Log t7 Hi Word	R		I	For cal use
287	ppm_V Log t7 Lo Word	R		I	For cal use
288	ppm_V Log t8 Hi Word	R		I	For cal use
289	ppm_V Log t8 Lo Word	R		I	For cal use
290	ppm_V Log t9 Hi Word	R		I	For cal use
291	ppm_V Log t9 Lo Word	R		I	For cal use
292					
293					
294	Log Buffer Latest Log Pointer	R		A1	Points to start of latest log
295	Log Buffer Main Val Min – Hi_Word	R		I	
296	Log Buffer Main Val Min – Lo_Word	R		I	
297	Log Buffer Main Val Max – Hi_Word	R		I	
298	Log Buffer Main Val Max – Lo_Word	R		I	
299	Log1 – Hours/Minutes	R		H	
300	Log1 – Day/Month/Seconds	R		J	
301	Log1 – Main Value – Hi_Word	R		I	
302	Log1 – Main Value – Lo_Word	R		I	
303	Log1 – System Status Register	R		L	
304	Log1 – Warning Flags Register	R		M	
305	Log2 – Hours/Minutes	R		H	
306	Log2 – Day/Month/Seconds	R		J	
307	Log2 – Main Value – Hi_Word	R		I	
308	Log2 – Main Value – Lo_Word	R		I	
309	Log2 – System Status Register	R		L	
310	Log2 – Warning Flags Register	R		M	
>>>	>>> To log288	R		As above	

* Factory Calibration Data

Table 11 Modbus Register Map

Register Configuration A

15	14	13	12	11	10	9	8	7	6	5	4	3	2	1	0

A1 — Unsigned Short. Range = 0...65535
A2 — Unsigned Short/10. Range = 0...6553.5
A3 — Unsigned Short/100. Range = 0...655.35
A4 — Unsigned Short/1000. Range = 0...65.535
A5 — Unsigned Short/1000. Range = 0...65.535

Conversion: Float*x = unsigned integer
Unsigned integer/x = float

Or cast:

Float value to read = ((float)(value))/x;
Unsigned short value to write = (unsigned short)(value*x)

Register Configuration B

15	14	13	12	11	10	9	8	7	6	5	4	3	2	1	0

B1 — Signed Short. Range -32768...+32767
B2 — Signed Short/10. Range -3276.8...+3276.7
B3 — Signed Short/100. Range -327.68...+327.67
B4 — Signed Short/1000. Range -32.768...+32.767
B5 — Signed Short/10000. Range -3.2768...+3.2767

Most languages will cast from one type to another

Values to write into register manually:

If value is a negative number: (value*x)+65536
If value is 0 or a positive number: value*x

E.g. for type B3:
(-5.39*100)+65536 = 64997
(2.01*100) = 201

Or cast:

(Unsigned short)(value*x)

Reading Values from register manually:

If value in register is greater than 32767: (value-65536)/x
If vaue in register is less than or equal to 32767: value/x

E.g. for type B3:
(64997-65536)/100 = -5.39
201/100 = 2.01

Or cast:

((float)((signed short)value))/x;

Register Configuration C — Modbus Configuration

15	14	13	12	11	10	9	8	7	6	5	4	3	2	1	0
						PT	PT	IA	IA	IA	IA	IA	IA	IA	IA

Instrument Address (IA)	Protocol Type (PT)
1...31 (1=def)	00=RS485 01=USB VCP 10= Ethernet

Register Configuration D — System Configuration

15	14	13	12	11	10	9	8	7	6	5	4	3	2	1	0
DC	DC	CP	CP	CP	CP	PS	PS	PU	PU	PU	TU	TU			NE

Temperature/Dew Point units (TU)	Pressure for Dew-Point Calculations (PS)
00 = C (def) 01 = F	00= Atmospheric (def) 01 = Fixed pressure (User input value) 10 = External Line pressure (Ext sensor)
Pressure Units (PU)	**Number of cal points to use (CP)**
000 = Bar.G (def) 001 = Bar.A 010 = Psi.G 011 = Psi.A 100 = MPa.G 101 = mmHg 110 = MPa.A	Minimum 3 and maximum is 12. Any other value is also 12.
Dew-Point Calculation method to use (DC)	**NAMUR Error level preference**
00=IGT 01=ISO 10=Ideal Gas (def)	0 = low error (3.0 mA) 1 = high error (22.0 mA)

Note: when a pressure unit or temperature unit is changed then the user must manually change the values for the following to the value in the new selected unit (if relevant).

- Fixed pressure for dew-point calculation
- External line pressure sensor min and max
- Alarm set-points
- Analog output ranges (low and high)

Register Configuration E — Alarm Configuration

Note: Alarm 4 is a system fault/warning alarm and is configured in register 9 (Configuration M)

15	14	13	12	11	10	9	8	7	6	5	4	3	2	1	0
L4	L3	L2	L1	A3	A3	A3	A3	A2	A2	A2	A2	A1	A1	A1	A1

Alarm1 Parameter (A1)	**Alarm2 Parameter (A2)**
0000 = Moisture – ppm_v (def) 0001= Moisture – ppm_w 0010 = Moisture – MGM3 0011 = Moisture – PA (wvp) 0100 = Moisture – LBMMSCF 0101 = Dew point 0110 = Oven temperature 0111 = Flow rate 1000 = Cell Pressure 1001 = Ext Line Pressure	0000 = Moisture – ppm_v 0001= Moisture – ppm_w 0010 = Moisture – MGM3 0011 = Moisture – PA (wvp) 0100 = Moisture – LBMMSCF 0101 = Dew point 0110 = Oven temperature (def) 0111 = Flow rate 1000 = Cell Pressure 1001 = Ext Line Pressure
Alarm3 Parameter (A3)	**Alarm Latch Control (L1 to L4)**
0000 = Moisture – ppm_v 0001= Moisture – ppm_w 0010 = Moisture – MGM3 0011 = Moisture – PA (wvp) 0100 = Moisture – LBMMSCF 0101 = Dew point 0110 = Oven temperature 0111 = Flow rate (def) 1000 = Cell Pressure 1001 = Ext Line Pressure	L1 = 1 = Alarm1 latch L2 = 1 = Alarm2 latch L3 = 1 = Alarm3 latch L4 = 1 = Alarm4 latch L1 = 0 = Alarm1 don't latch L2 = 0 = Alarm2 don't latch L3 = 0 = Alarm3 don't latch L4 = 0 = Alarm4 don't latch

Register Configuration F — Analog Output Config

15	14	13	12	11	10	9	8	7	6	5	4	3	2	1	0
						T2	T1	O2	O2	O2	O2	O1	O1	O1	O1

Ouput1 Parameter (O1)	**Output2 Parameter (O2)**

0000 = Moisture – ppm_V (def) 0001 = Moisture – ppm_W 0010 = Moisture – MGM3 0011 = Moisture – PA 0100 = Moisture – LBMMSCF 0101 = Dew point 0110 = Oven temperature 0111 = Flow rate 1000 = Cell Pressure 1001 = Ext Line Pressure	0000 = Moisture – ppm_V 0001= Moisture – ppm_w 0010 = Moisture – MGM3 0011 = Moisture – PA 0100 = Moisture – LBMMSCF 0101 = Dew point (def) 0110 = Oven temperature 0111 = Flow rate 1000 = Cell Pressure 1001 = Ext Line Pressure
Output Type – (T1 to T2)	
0 = 4...20 mA 1 = 1...5 V *(Where T1 is CH1 and T2 is CH2)*	

Register Configuration H — Time (hours/minutes)

15	14	13	12	11	10	9	8	7	6	5	4	3	2	1	0
HH	HH	HH	HH	HH	HH	HH	HH	MM	MM	MM	MM	MM	MM	MM	MM

Hours Number (HH)	Minutes Number (MM)
00...23	00...59

Register Configuration I — 32 bit Precision Floating Point Representation

IEEE-754 single precision floating point format. This format is 'Big Ended' which means that the high byte is at a lower address in memory than the Lo byte, and is represented as such in the register memory map. The IEEE-754 format is shown below.

Bit 31	Bits 30...23	Bits 22...0
Sign bit 0 = + 1 = -	Exponent Field Has a +127 bias value	mantissa Decimal representation of binary. Where 1.0 <= value < 2.0

Examples of floating point to HEX are shown below:

1. +10.3

sign bit = 0
Exponent = 3, therefore exponent field = 127 + 3 = 130 , and bits 30...23 = 1000 0010
The mantissa = 1.2875 which in binary representation = 1010 0100 1100 1100 1100 1101

Adjusting the mantissa for the exponent moves the decimal point to the right if positive and to the left if negative.

As the exponent is = 3 then the mantissa becomes = 1010 0100 1100 1100 1100 1101, therefore:

1010 = (1x23) + (0x22) + (1x21) + (0x20) = 10 and
0100 1100 1100 1100 1101 = (0x2-1) +(1x2-2) + -- + (1x2-20) = 0.3

Therefore the word value = 0100 0001 0010 0100 1100 1100 1100 1101
= 4124CCCD

Consequently hi word= 4124 and lo word = CCCD

2. - 0.0000045

sign bit = 1
Exponent = -18, therefore exponent field = 127 + (-18) = 109 , and bits 30...23 = 0110 1101
The mantissa = 1.179648 which in binary representation = 1001 0110 1111 1110 1011 0101

i.e. (1x2-18) + (1x2-21) + (1x2-23) etc. = 0.0000045

Therefore the word value = 1011 0110 1001 0110 1111 1110 1011 0101
= B696FEB5

Register Configuration J — Date

15	14	13	12	11	10	9	8	7	6	5	4	3	2	1	0
DD	DD	DD	DD	DD	MM	MM	MM	MM	YY	YY	YY	YY	YY	YY	YY

Date Number (DD)	Month Number (MM)
1...31	1...12
Year Number (YY) or Seconds	
00...99 for year or 00...59 for seconds	

Register Configuration K — Historic Calibration Log — Details

15	14	13	12	11	10	9	8	7	6	5	4	3	2	1	0
MA	IE	UE		CF	CF	CF	CF	CF	CF	CF	CF	CF	CF	CF	CF

Correction Factor (CF)	Manual or Auto (MA)
1...4000 /1000.0 = 0.2500...4.000	0=Manual 1=Automatic
Internal or External (IE)	**User Entry (UE)**
0=Internal 1=External	1= CF manually written by user 0 = CF generated via calibration

Register Configuration L — System Status Register — 229

15	14	13	12	11	10	9	8	7	6	5	4	3	2	1	0
A4	A4	A3	A3	A2	A2	A1	A1	SS	PS		DH	SM	SM	CP	CP

Cycle Phase (CP)	System Mode (SM)
00= Reference phase 01= Sample Phase 10 = Cal Phase (internal or external)	00= Standby 01= Measurement 10 = Calibration
Relay Alarm Status flags (A1, A2, A3, A4)	**Setup Status (SS)**
Example: A1 = 00=OK (relay de-energized) A1 = 01=High (or Fault)(relay energized) A1 = 10=Low (relay energized) A1 = 11= Latched (relay latched but condition now ok)	0 = Setup mode is OFF 1 = Setup mode is ON
Purge Status (PS)	**Current Data Hold Status**
0=Not purging 1=Purging (System in Setup mode and only REF solenoid is energized)	0 = Data is currently not held 1 = Data is currently held

Register Configuration M — System Warning Flags (Register 230), Analyzer Status Alarm Relay Selection Mask (Register 9)

1=Warning or fault, 0=OK

15	14	13	12	11	10	9	8	7	6	5	4	3	2	1	0

Bit	HEX	Warning Condition
0	0001	**Oven temperature unstable.** Oven temperature has not been stable within ±0.01C of setpoint for continuous 5 minutes. (Process alarms de-energized, both analog outputs at fault condition
1	0002	**Enclosure temperature too high.** Enclosure (System) temperature too high. (> Oven temperature setpoint -2 °C)
2	0004	**Flow control error.** MFC Flow control error (by >5ml/m of flow target)
3	0008	**Cell pressure sensor error.** (under 4 mA, over 20 mA or no signal)
4	0010	**Ext Press sensor error.** (under 4 mA, over 20 mA or no signal)
5	0020	**Field cal error.** Internal moist generator drift, instrument excessive drift or desiccant dryer deterioration requiring very large corr. factor (<0.2500 or >4.000). In this case the correction factor would be set to 1.0. (Checked after field calibration)
6	0040	**Beat freq. out of range.** Beat frequency Under/Over acceptable range (<1500 Hz, >20000 Hz)
7	0080	**ppm_v over range.** ppm_v over instrument range (>2000 ppm_v)
8	0100	**Oven temperature sensor fault.** Oven temperature sensor fault (Process Alarms de-energized, Fault Alarm Active, both Analog outputs at fault condition (ADC <10, >4000 counts)
9	0200	**mA output 1 error.** (o/c or high resistance at output)
10	0400	**mA output 2 error.** (o/c or high resistance at output)
11	0800	**Oscillator board comms error.** Oscillator board comms. error or board not present (checked on startup)
12	1000	**Ethernet board comms. error.** Ethernet Board comms. error or board not fitted (checked on startup)
13	2000	**Dryer due for service.** Desiccant Dryer due for service or replacement (>5000000 ppm_v)
14	4000	**Moisture generator due for service.** Internal Moisture Generator due for service or replacement (>1030days)
15	8000	Calibration Alarm In calibration mode or data held (or both)

Analyzer Status Alarm selection mask (in Register 9) allows user to set which condition(s) trigger status relay alarm 4.

Register Configuration P1 — Next Calibration Configuration

15	14	13	12	11	10	9	8	7	6	5	4	3	2	1	0
MA	IE	DH	MG					AC	AC	AC	AC	AC	AC	AC	AC

Manual or Auto (MA)	**Internal or External (IE)**
0 = Manual 1 = Auto	0 = Internal 1 = External
Data Hold (DH)	**Data Hold Additional Cycles (AC)**
0 = off 1 = on	0...240 cycles

Register Configuration P2 — Next Calibration Configuration — Intervals between cal

15	14	13	12	11	10	9	8	7	6	5	4	3	2	1	0
	IH	IH	IH	IH	IH	ID	ID	ID	ID	ID	ID	ID	ID	ID	ID

Hour of Day (IH)	**Interval Days (ID)**
0...23	1 day to 365 days

Register Configuration Q — Various Parameters, High Byte and Low Byte

15	14	13	12	11	10	9	8	7	6	5	4	3	2	1	0
MS	MS	MS	MS	MS	MS	MS	MS	MS	MS	MS	GN	GN	GN	GN	GN

MFC Span in ml/m (MS)	**Gas Number (GN)**
0...2000 ml/m	0...23 Gases (see Appendix D.1 for details).

Register Configuration T — Instrument Setup and Command Register (Register 198)

Writing relevant number to this register initiates associated setting, calibration or test function

*** Means only for Michell Factory use**

**** Put is setup mode first and then after test put back into measurement mode**

2 = Set Cell Pressure 4 mA ADC Value*

3 = Set Cell Pressure 20 mA ADC Value*

4 = Set Ext Pressure 4 mA ADC Value*

5 = Set Ext Pressure 20 mA ADC Value*

6 = Send Test String to Sensor Comms Channel*

7 = Send Test String to Display Comms Channel*

10 = Force Analog Output 1...4 mA**

11 = Force Analog Output 1...20 mA**

12 = Force Analog Output 2...4 mA**

13 = Force Analog Output 2...20 mA**

14 = Force Analog Output 1...12 mA**

15 = Force Analog Output 2...12 mA**

19 = All Alarm Relays de-energized

20 = Set Alarm Relay1**

21 = Set Alarm Relay2**

22 = Set Alarm Relay3**

23 = Set Alarm Relay4**

25 = Set REF Solenoid* (uses 100% power to solenoid)**

26 = Set SAMPLE Solenoid* (uses 100% power to solenoid)**

27 = Set CAL Solenoid* (uses 100% power to solenoid)**

28 = All Solenoids Off* (uses 100% power to solenoid)**

30 = Set RTC Calibration ppm error value*

35 = Set Defaults Osc Board*

36 = Set Defaults Main Board* (Does not default the main board calibration values).

50 = Set System Mode to Standby (all solenoids off and no phase countdown)*

51 = Set System Mode to Measurement if in Cal mode (i.e. Abort Cal) OR Set to Manual Cal if in Auto cal countdown mode

52 = Set System Mode to Calibration if manual cal option set OR Start Auto Cal countdown mode if Auto Cal option set. (Only if oven temperature has become stable).

60 = Start on board SD Logging (Open log file)*

61 = Stop on board SD logging (Close log file)*

65 = Enter Board Setup Mode* (Normal measurement cycle and output/alarm updates are stopped)

66 = Exit Board Setup Mode*(Normal measurement cycle and output/alarm updates are re-started)

67 = Reset Ram Log Buffer and Stats to zeros

68 = Set Ethernet Settings (to values in Registers 245...250) – (Command not allowed via modbus)

70 = Reset Dryer Service flag and ppm sum register to 0.0 ppm

71 = Reset Moist Generator Service flag and hours used counter to 0hr

74 = Clear Alarm1 Latch

75 = Clear Alarm2 Latch

76 = Clear Alarm3 Latch

77 = Clear Alarm4 (Fault) Latch

78 = Start Purge (Ref solenoid energized, all others de-energized. System in Setup mode)

79 = Stop Purge (System reverts to normal measurement mode)

Register Configuration U — Internal Logging Configuration/Service Interval Days

15	14	13	12	11	10	9	8	7	6	5	4	3	2	1	0
								RL	RL	RL	RL	DP	DP	DP	DP

DeltaF and ppm_V Log Interval in cycles (DP)	Ram Buffer Log parameter (RL)
Range is 1 to 15 cycles. (for CAL use, def = 1)	0000 = Moisture – ppm_V (def) 0001= Moisture – ppm_w 0010 = Moisture – MGM3 0011 = Moisture – PA (wvp) 0100 = Moisture – LBMMSCF 0101 = Dew point 1111 = No logging

Register Configuration V — Internal Logging Configuration/Service Interval Days

15	14	13	12	11	10	9	8	7	6	5	4	3	2	1	0
DC	DC	DC	DC	DC	DC	DC	DC	ML	ML	ML	ML	ML	ML	ML	ML

Dryer Capacity or Used (DC) – in ppm	Moisture Gen Capacity or Used (ML) – in Days
0...255 x 100,000 represents 0...25,500,000 in 100,000 steps.	0...255 x 10 Represents 0...2,550 days (61200 hours) in 10 day steps

Register Configuration W — Signal Filter Settings

15	14	13	12	11	10	9	8	7	6	5	4	3	2	1	0
									BF	BF	DF	DF	DF	DF	DF

BeatF Median Filter (BF) Setting	DeltaF Median Filter (DF) Sample size
5 sample Median filter to remove spikes 1=Median of 1 (middle value) 3=Median of 3, averaged (default) Any other value = OFF	4...24 = Sample size of filter to smooth signal (default=12) < 4 or >24 = OFF

C.1 Set Points and Ranges

Set points and ranges for Analog Outputs, Alarms, Fixed User Pressure, Cell Pressure and External (line) Pressure sensor.

Unit	Adjustment Range/Res.	Default Values	Register Range	Register Type
ppm_V	0.0...3000.0	0.0...2000.0	0...30000	A2 (unsigned short/10)
ppm_W	0...40000	0...40000	0...40000	A1 (unsigned short)
mgm^3	0...20000	0...20000	0...20000	A1 (unsigned short)
Pa	0.0...3000.0	0.0...3000.0	0...30000	A2 (unsigned short/10)
dew point degC	-120.0...+20.0	-100.0...0.0	-1200...200	B2 (signed short/10)
dew point degF	-184.0...+68	-148.0...32.0	-1840...680	B2 (signed short/10)
lbmmscf	0...60000	0...60000	0...60000	A1 (unsigned short)
Oven T degC	-50.0...+100.0	59.9...60.1	-500...1000	B2 (signed short/10)
Oven T degF	-58.0...+212.0	139.8...140.2	-580...+2120	B2 (signed short/10)
Flow, ml/m	0.0...300.0	90.0...110.0	0...3000	A2 (unsigned short/10)
Pressure, Psi.G	0.0...3000.0	0.0...3000.0	0...30000	A2 (unsigned short/10)
Pressure, Psi.A	14.7...3014.7	15.0...3015.0	147...30147	A2 (unsigned short/10)
Pressure, Bar.G	0.00...204.08	0.00...204.00	0...20408	A3 (unsigned short/100)
Pressure, Bar.A	1.00...205.08	1.00...205.00	1...20508	A3 (unsigned short/100)
Pressure, MPa.G	0.01...20.78	0.01...21.00	1...2078	A3 (unsigned short/100)
Pressure, mmHg	750...65535 (limited)	750...65000	0...65535 (limited)	A1 (unsigned short)
Pressure, MPa.A	0.01...20.78	0.01...21.00	1...2078	A3 (unsigned short/100)
Pressure MPa.A	0.01...20.78	0.01...21.00	1...2078	A3 (unsigned short/100)

C.2 Gases for Gas Correction Values

Gases for gas correction values, indexed 0...23. If a USER gas is selected then the instrument will use the gas correction values that are set in the respective registers 38, 39 and 40 for the Flow correction and at registers 41, 42 and 43 for the molecular weights.

0 = Air – Mixture	12 = He – Helium
1 = Ar – Argon	13 = Kr – Krypton
2 = CH4 – Methane	14 = N2 – Nitrogen
3 = C2H2 – Ethyne	15 = Ne – Neon
4 = C2H4 – Ethelyne	16 = NH3 – Ammonia
5 = C2H6 – Ethane	17 = NO – Nitrogen Oxide
6 = C3H6 – Propylene	18 = N2O – Nitrous Oxide
7 = C3H8 – Propane	19 = O2 – Oxygen
8 = C4H10 – Butane	20 = XE – Xenon
9 = CO – Carbon Monoxide	21 = UserGas1
10 = CO2 – Carbon Dioxide	22 = UserGas2
11 = H2 – Hydrogen	23 = UserGas3

Appendix D

Quality, Recycling & Warranty Information

Appendix D Quality, Recycling, Compliance & Warranty Information

Michell Instruments is dedicated to complying to all relevant legislation and directives. Full information can be found on our website at:

www.michell.com/compliance

This page contains information on the following directives:

- Anti-Facilitation of Tax Evasion Policy
- ATEX Directive
- Calibration Facilities
- Conflict Minerals
- FCC Statement
- Manufacturing Quality
- Modern Slavery Statement
- Pressure Equipment Directive
- REACH
- RoHS3
- WEEE2
- Recycling Policy
- Warranty and Returns

This information is also available in PDF format.

Appendix E

Return Document & Decontamination Declaration

Appendix E Return Document & Decontamination Declaration

Decontamination Certificate

IMPORTANT NOTE: Please complete this form prior to this instrument, or any components, leaving your site and being returned to us, or, where applicable, prior to any work being carried out by a Michell engineer at your site.

Instrument			Serial Number	
Warranty Repair?	YES	NO	Original PO #	
Company Name			Contact Name	
Address				
Telephone #			E-mail address	
Reason for Return /Description of Fault:				

Has this equipment been exposed (internally or externally) to any of the following? Please circle (YES/NO) as applicable and provide details below		
Biohazards	YES	NO
Biological agents	YES	NO
Hazardous chemicals	YES	NO
Radioactive substances	YES	NO
Other hazards	YES	NO
Please provide details of any hazardous materials used with this equipment as indicated above (use continuation sheet if necessary)		
Your method of cleaning/decontamination		
Has the equipment been cleaned and decontaminated?	YES	NOT NECESSARY

Michell Instruments will not accept instruments that have been exposed to toxins, radio-activity or bio-hazardous materials. For most applications involving solvents, acidic, basic, flammable or toxic gases a simple purge with dry gas (dew point <-30°C) over 24 hours should be sufficient to decontaminate the unit prior to return.
Work will not be carried out on any unit that does not have a completed decontamination declaration.

Decontamination Declaration

I declare that the information above is true and complete to the best of my knowledge, and it is safe for Michell personnel to service or repair the returned instrument.

Name (Print)		Position	
Signature		Date	

MICHELL Instruments

F0121, Issue 2, December 2011

NOTES

Instrument Expert
Original factory
packaging
www.keruiyiqi.cn

A PST Brand (www.ProcessSensing.com)

MICHELL Instruments

http://www.michell.com