Instrument Expert
Original factory packaging
www.keruiyiqi.cn

Condumax II

Hydrocarbon Dew-Point Analyzer

Automatic, on-line measurement of hydrocarbon and water dew point in natural gas.

H H
H_2 READY

Highlights

- Fully automatic on-line analysis
- Objective, highly repeatable measurement
- 0.5°C (0.9°F) hydrocarbon dew-point accuracy
- Fundamental chilled mirror principle
- Patented detection technique
- Self-cleaning
- No purge or cooling gas needed
- Optional water dew-point analysis
- Modbus RTU
- ATEX, IECEx, UKCA and cQPSus certified

Applications

- Natural gas processing
- Protection of turbo-expander plant
- Gas quality measurements at custody transfer
- Transmission pipeline monitoring
- Confirmation and control of fuel gas 'superheat' to turbine power plant
- Suitable for use with natural gas containing up to 20% hydrogen with no further modification required

Hydrocarbon Dew Point: A Critical Natural Gas Quality Parameter

For natural gas producers, pipeline operators and direct contract buyers, hydrocarbon dew point is difficult to measure and control – but it is vital to avoid custody transfer disputes frequently resulting in shut-ins due to today's tighter contractual limits.

Accurate hydrocarbon dew-point measurement and control has emerged as THE issue at gas quality conferences, including the AGA. The need for harmonization of analysis methods to ensure consistent best practice is being promoted by research groups within independent organizations such as API in North America and GTE and GERG in Europe.

These groups are evaluating the relationship between direct hydrocarbon dew-point measurement, the manual Bureau of Mines (BOM) method, potential hydrocarbon liquid content (PHLC) and analytical techniques such as gas chromatography (GC) with various Equations of State (EOS) software packages.

The direct chilled mirror technique incorporated in the Michell Instruments' Condumax II is the definitive method of measuring hydrocarbon dew point, and is preferred by most gas producers, pipeline operators and direct contract buyers around the world. Since 1986, the original Condumax enabled users to make direct fundamental measurements automatically, on-line, with minimal maintenance demands in service and with a level of objectivity previously impossible to achieve. Condumax II extends this capability, adding the latest features and specifications to a proven and patented measurement technique. Condumax II offers the user the opportunity to standardize on a hydrocarbon dew-point measurement technology that provides excellent correlation to PHLC, EOS calculations of extended composition analysis by laboratory GC and the BOM method in an instrument that is simple to install and virtually maintenance free.

The Dark Spot™ Measurement Principle

Condumax II uses a patented chilled mirror optical measurement technique that is radically different to that of any other instrument. Sensitivity of better than 1 ppm molar (1mg/m^3) of condensed hydrocarbons enables the analyzer to detect the almost invisible films of condensate that are characteristic of hydrocarbon gases at dew point, due to their low surface tension and colorless appearance. The result is a breakthrough in accuracy and repeatability.

The optical sensor comprises an acid etched, semi-matt stainless steel "mirror" surface with a central conical-shaped depression, which is chilled during a measurement cycle. Collimated visible red light is focused onto the central region of the optical surface. In the dry condition, the incident light beam is dispersed by the matt surface providing a base signal to the optical detector. During a measurement cycle, hydrocarbon condensate is formed on the optical surface and it becomes reflective due to the low surface tension of the condensate. An annular ring of light forms around the detector and there is a dramatic reduction in the scattered light intensity within the central Dark Spot™ region.

This secondary effect is monitored and interpreted. The Dark Spot™ detection technique utilizes the physical characteristic of hydrocarbon condensate that makes it so difficult to detect in a manual visual dew-point meter (BOM). When a predetermined layer of condensate has been detected, the instrument records the temperature of the optical surface as the hydrocarbon dew point. In the subsequent recovery cycle, the optical surface is actively heated typically to +50 °C (+122 °F) to evaporate the condensates back into the flowing gas sample. This fully automatic process is complete in under ten minutes.

Sensor Cell

The design of the Condumax II sensor cell is critical to its dynamic performance. This cell combines the optical detection system, Dark Spot™ sensor, thermocouple and three-stage Peltier heat-pump in a stainless steel cell assembly. The cell carries an operating pressure rating of 100 barg and achieves a measurement depression range (ΔT) of up to -55K from the analyzer operating temperature.

Flow De-coupling

A flow de-coupling method is used in order to achieve maximum accuracy. Discrete measurement cycles, at user definable intervals, lock a fixed sample of the hydrocarbon gas mixture into the sensor cell. As the optical surface is chilled, sequential condensation of hydrocarbon components occurs with the heaviest hydrocarbons condensing first. Thus a flowing sample would lead to a falsely high indication of the hydrocarbon dew-point temperature of the gas. The fixed sample method used in the Condumax II ensures representative condensation of all hydrocarbon components and prevents preferential drop-out of heavy ends that occur with flowing samples often used by other measurement methods.

Dark Spot™ Measurement Principle

© 2023 Michell Instruments

Intelligent Control

The Condumax II has a fully automatic, intuitive and intelligent control system that improves accuracy, sensitivity and reproducibility under any operating condition. A three-stage Peltier heat-pump under powerful digital command allows Condumax II to vary its chill rate to enable detection of the smallest amount of condensate on the optical surface.

During start-up, Condumax II will perform a measurement cycle at a standard chill rate in order to "range-find" the hydrocarbon dew-point level. On subsequent cycles, the previous measured value is used to determine an optimized chill rate that will cause the sensor surface to cool quickly in the initial phase, but reduce its chill rate to 0.05 °C/sec (0.09 °F/sec) as it approaches the hydrocarbon dew point. This gives the user previously unattainable levels of precision and reproducibility and allows easy harmonization with other HCDP measurement techniques or measurement practices of individual users. Condumax II can also operate in Condensate Mode in order to give reliable PHLC measurement. In conventional dew-point measurement mode, analysis is performed at the cricondentherm condition or at user required pressure level.

Condumax II also enables the user to determine the phase envelope of their gas through direct measurements at varying pressures. Condumax II is designed for easy operation, with innovative touch-screen control of all functions through the simple user menu that can be viewed in complete safety within the hazardous area environment on the high-resolution vacuum fluorescent alphanumeric display.

Sampling system features

- Microporous membrane filter
- Heated pressure regulator
- Heated enclosure (option)
- Sample connections
- Optional combined water and hydrocarbon dew-point analysis
- 0.5 °C (0.9°F) hydrocarbon dew-point accuracy
- Fully automatic on-line analysis
- Modbus RTU

Condumax II Sampling System (outdoor version)

Condumax II Sampling System

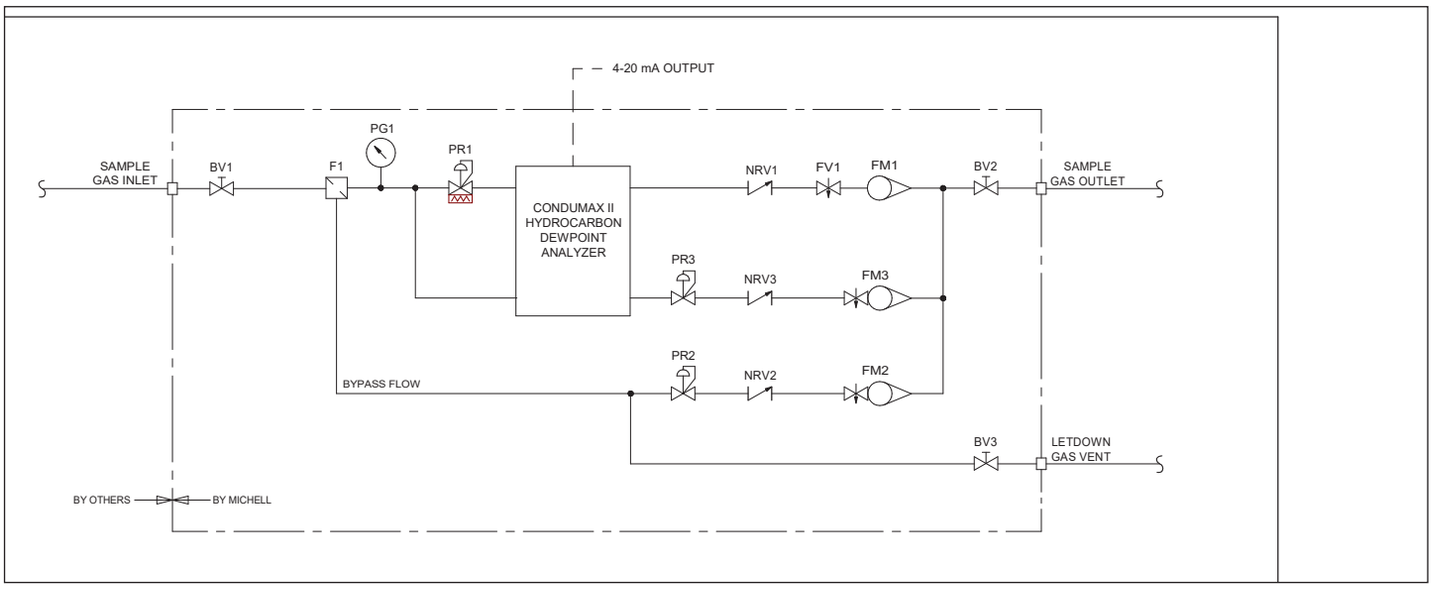

© 2023 Michell Instruments

System Description

Main Unit

The Condumax II Main Unit contains all of the critical components in a single explosion proof/flameproof enclosure for installation in Zone 1 or 2 (Class 1, Div. 1 and 2 areas). The Dark Spot™ sensor cell and optional water dew-point sensor are mounted inside the unit in conjunction with the pressure transducers, flow switches, measurement electronics and display. Flame arrestors on the gas inlet and outlet ports provide safety protection. Electrical connections are made through cable glands at the base of the enclosure. The main unit is a fully functional hydrocarbon dew-point analyzer and requires only a clean, pre-conditioned gas sample and AC power for its operation.

Simultaneous Water Dew-Point Analysis

Water dew-point measurement is of equal importance to hydrocarbon dew point for all gas producers and pipeline operators. Optional second measurement channel utilizing the advanced Michell ceramic metal-oxide moisture sensor, proven in over 1,000 petrochemical natural gas plant installations worldwide, to provide continuous on-line analysis to enable Condumax II to confirm conformance to both dew point gas quality specifications.

Condumax II Main Unit

Sampling System

Indoor and outdoor sampling systems are available, providing comprehensive sample conditioning of natural gas at any pressure up to 138 barg for the standard design. The sampling system includes pressure regulation, flow control and most importantly micro-porous membrane filtration with by-pass arrangement and condensate drain to give fast response and protection from liquid hydrocarbon/glycol contamination. Dual channel sampling is available for the combined hydrocarbon/ water dew point analyzer package.

The outdoor version is housed in an IP66 rated, insulated stainless steel enclosure. The optional thermostatically controlled heating ensures reliable operation with no condensate or water drop-out prior to measurement. For both the indoor and outdoor sampling systems, the Condumax II Main Unit is mounted integral to the Sampling System.

Human Interface

The Condumax II is designed to be flexible in terms of measurement display and connectivity to other equipment. As standard, Condumax II provides a multi-function vacuum fluorescent display on the Main Unit that shows all measurement parameters and allows the user to adjust certain control parameters, view log data, max/min statistics etc. In addition, Condumax II provides two 4...20 mA outputs, configurable from the Main Unit user interface for any combination of measurement parameters. A digital output using Modbus RTU protocol is provided, for connection to an external computer, DCS or PLC system located in a safe area. Active X controls are an available option for integration in DCS systems.

Technical Specifications

Hydrocarbon Dew-Point Measurement	
Measuring Technique	Dark Spot™ fixed sample analysis. Direct photo-detection of hydrocarbon condensate at hydrocarbon dew-point temperature
Sensor Cooling	Automatic via 3-stage Peltier effect electronic cooler under adaptive control
Maximum Range	Up to Δ -55K measurement depression from Main Unit operating temperature
Accuracy	±0.5 °C hydrocarbon dew point (single and multiple condensable component analysis)
Sample Flow	0.03 m^3/hr (0.5 Nl/min) – alarm standard
Measurement Frequency	6 cycles/hour (recommended) 12 cycles/hour (maximum)
Operating Pressure	15…100 barg (218…1450 psig)
Water Dew-Point Measurement (optional)	
Measuring Technique	Michell ceramic metal-oxide moisture sensor
Units – Moisture Content	°C and °F water dew point; lbs/MMscf; mg/m^3, ppm_V
Resolution	0.1 °C, 0.1 °C
Range	Calibrated from -100 to +20 °C (-148 to +68 °F) dew point
Accuracy	±1 °C ± (1.8 °F) from -59...+20 °C (-74.2...+68 °F) dew point ±2 °C (3.6 °F) from -100...-60 °C (-148...+154 °F) dew point
Sample Flow	1 Nl/min (0.06 m^3/hr) – alarm standard
Temperature Coefficient	Algorithm compensation (-20...+50 °C)
Operating Pressure	30…138 barg (435…2002 psig)
Pressure Measurement(s) **Hydrocarbon dew-point analysis pressure** **Optional water dew-point process pressure**	
Units	MPa, barg, psig
Resolution	0.1 MPa and barg, 1 psig
Range	HC dew point: 0...100 barg (0...1450 psig) Water dew point: 0...200 barg (0...2900 psig)
Accuracy	±0.25% FS
Hydrocarbon Dew-Point Analyzer	
Resolution	Hydrocarbon and water dew point: 0.1 °C (0.18°F)
Sample Gas Supply	Natural gas up to 100 barg (1450 psig), pressure regulated in sampling system
Enclosure	EExd cast enclosure with removable glass window viewing port. Internally heated for condensation protection
Sample Gas Connections	1/8" NPT(F) for both hydrocarbon and water dew-point channels; Sampling system: 6mm OD or 1/4" OD
Operating Environment	Indoors/Outdoors -20...+50 °C (-4...+122 °F) Max 95 %rh
Power Supply	90...260 V AC 50/60 Hz, 125 W Main Unit; 300W c/w indoor sampling system; 400W c/w outdoor sampling system
Weight	Main Unit 22.5 kg (49.6 lbs) ~60 kg (132.3 lbs) c/w Sampling system (indoor) ~75 kg (165.3 lbs) c/w Sampling system (outdoor)
Integrated Display/ Keyboard	Touch screen with vacuum fluorescent display
Outputs	Modbus RTU, RS485 @ 9600 baud rate. Two 4...20 mA linear (non-isolated) outputs, user configurable for any combination of dew point or pressure parameters
Alarms	Process and analyzer status via software register and display annotation. Integrated low flow alarms for each sample flow. Analyzer status fault flag 23 mA on mA output 1
Certification	
Hazardous Area Certification	**ATEX/UKCA:** II 2 G Ex db IIB+H2 T3 Gb Tamb -40 °C...+60 °C **IECEx:** Ex db IIB+H2 T3 Gb Tamb -40 °C...+60 °C **cQPSus:** Class I, Division 1, Groups B, C & D T3 Tamb -25 °C...+60 °C Class I, Zone 1 Ex db IIB+H2 T3 Gb AEx db IIB+H2 T3 Gb Tamb -40 °C...+60 °C
Additional	TRCU 012 (EAC), PESO (India), NEPSI (China), Ukraine Ex
Pattern approval	GOST-R, GOST-K, GOST-U

***Available to customer-specific order (consult Michell Instruments)**

For full details of configurations and options, please refer to the **Condumax II Order Codes** list. Available from the Michell Instruments website or from your local Michell Instruments office.

Condumax II Transportable Hydrocarbon & Water Dew-Point Analyzer

A complete transportable natural gas dew-point analysis system for field spot-check measurements. Periodic online operation when located in a temperature maintained analyzer house. Measurements and functionality are instantly accessible through integrated alphanumeric display and touch-glass HMI interface including log of dew-point readings for operator review.

For more information, please contact your local Michell Instruments office, or visit our website www.ProcessSensing.com.

Main Unit

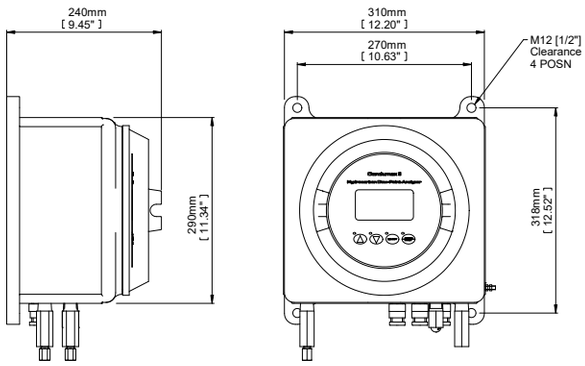

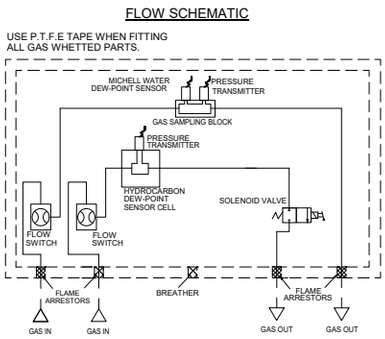

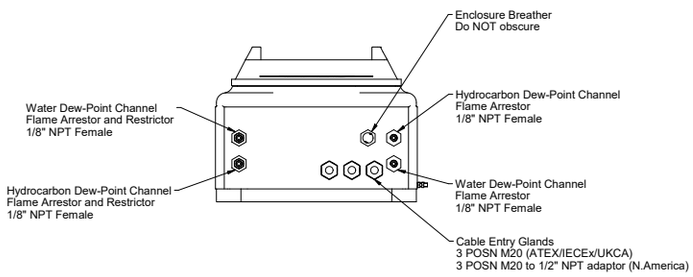

Sampling Systems

Indoor Versions
316 Stainless Steel Panel

Condumax II HC and water dew-point analyzer with sampling system for indoor installation.

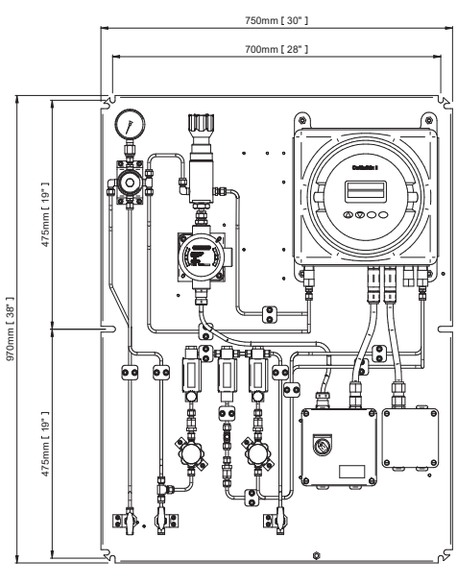

Outdoor Versions
Stainless Steel Enclosure

Condumax II HC and water dew-point analyzer within sampling system for outdoor installation.
Options fitted in version shown: Enclosure cooling and heating.

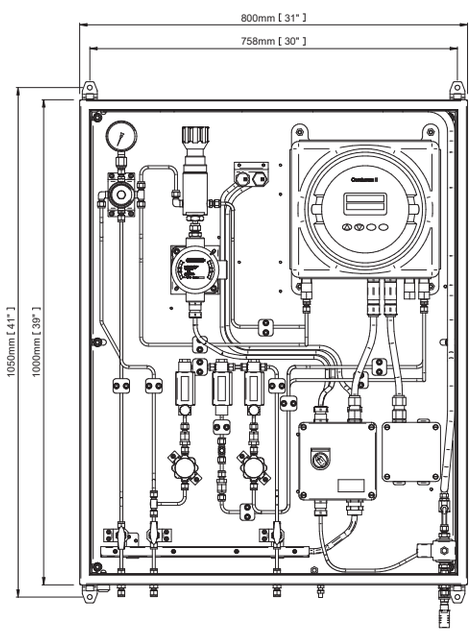

General Note: Outline dimensions for HC dew point only versions are also the same as shown.

Michell Instruments adopts a continuous development programme which sometimes necessitates specification changes without notice.
Issue no: Condumax II_97149_V10.2_EN_0923

© 2023 Michell Instruments